**WORK SESSION:** A work session will be held at 6:00 p.m. in Conference Room #3, Second Floor, of the Farmington City Hall, 160 South Main Street. The work session will be as follows:

1. US89 Environmental Study Update
2. Legislative Update with City Lobbyists (MIB Partners)
3. City Council Questions

The public is welcome to attend.

## FARMINGTON CITY COUNCIL MEETING
## NOTICE AND AGENDA

Notice is hereby given that the City Council of **Farmington City** will hold a regular City Council meeting on **Tuesday, June 6, 2017, at 7:00 p.m.** The meeting will be held at the Farmington City Hall, 160 South Main Street, Farmington, Utah.

*Meetings of the City Council of Farmington City may be conducted via electronic means pursuant to Utah Code Ann. § 52-4-207, as amended. In such circumstances, contact will be established and maintained via electronic means and the meeting will be conducted pursuant to the Electronic Meetings Policy established by the City Council for electronic meetings.*

The agenda for the meeting shall be as follows:

### CALL TO ORDER:

7:00 Roll Call (Opening Comments/Invocation) Pledge of Allegiance

### PUBLIC HEARINGS:

7:05 Boundary Adjustment with Kaysville City – Lowell Johnson/UDOT Property

### PRESENTATIONS:

7:15 Introduction of New Police Offices and Administration of Oath of Office

### ACTION ITEMS:

7:20 Approval of Kilgore Contracting to Construct the FY2018 Road Maintenance Project

7:25 Approval of Squires Construction for the 650 West Park Pickleball and Basketball Courts

### SUMMARY ACTION:

7:30 Minute Motion Approving Summary Action List

1. Approval of Minutes from May 16, 2017

2. Resolution for Pick-Up Contribution for Firefighters on State Retirement
3. Davis County Dispatch Agreement
4. 700 South Street Cross-Section Modification
5. Arhaus LLC Shaved Ice Rights-of –Way License Agreement
6. Local First Utah's Independents Week Proclamation
7. Bronson Andreasen Fee Waiver Request
8. Lease Agreement for House located at 190 South Main Street

**GOVERNING BODY REPORTS:**

7:35 City Manager Report

7:40 Mayor Talbot & City Council Reports

**ADJOURN**

**CLOSED SESSION**

Minute motion adjourning to closed session for property acquisition.

DATED this 31st day of May, 2017.

**FARMINGTON CITY CORPORATION**

By: Holly Gadd
Holly Gadd, City Recorder

***PLEASE NOTE:** Times listed for each agenda item are estimates only and should not be construed to be binding on the City Council.

*In compliance with the Americans with Disabilities Act, individuals needing special accommodations (including auxiliary communicative aids and services) during this meeting, should notify Holly Gadd, City Recorder, 451-2383 x 205, at least 24 hours prior to the meeting.*

# CITY COUNCIL AGENDA

For Council Meeting:
June 6, 2017

**SUBJECT: Roll Call (Opening Comments/Invocation) Pledge of Allegiance**

It is requested that Mayor Jim Talbot give the invocation to the meeting and it is requested that City Manager Dave Millheim lead the audience in the Pledge of Allegiance.

NOTE: Appointments must be scheduled 14 days prior to Council Meetings; discussion items should be submitted 7 days prior to Council meeting.

# CITY COUNCIL AGENDA

For Council Meeting:
June 6, 2017

**PUBLIC HEARING:** **Boundary Adjustment with Kaysville City – Lowell Johnson/UDOT Property**

**ACTION TO BE CONSIDERED:**

1. Hold the public hearing.
2. See staff report for recommendation.

**GENERAL INFORMATION:**

See enclosed staff report prepared by David Petersen, Community Development Director.

NOTE: Appointments must be scheduled 14 days prior to Council Meetings; discussion items should be submitted 7 days prior to Council meeting.

# FARMINGTON CITY

H. JAMES TALBOT
MAYOR

BRETT ANDERSON
DOUG ANDERSON
JOHN BILTON
BRIGHAM N. MELLOR
CORY R. RITZ
CITY COUNCIL

DAVE MILLHEIM
CITY MANAGER

City Council Staff Report

To: Honorable Mayor and City Council

From: David E. Petersen, Community Development Director

Date: June 6, 2017

SUBJECT: **BOUNDARY ADJUSTMENT WITH KAYSVILLE CITY--LOWELL JOHNSON/UDOT PROPERTY**

## RECOMMENDATION

1. Hold a Public Hearing.

2. Suggested Alternative Motions:

   A. Deny the proposed request adjusting the City's common boundary with Kaysville City at 1322 South Main because: 1) the Council does not know what the owner intends to do with the property; 2) a Farmington street will abut the property, 1075 West, with no taxes in return for the continuous maintenance thereof because the property will be located in Kaysville; and 3) the shape of the Lowell Johnson property is now not configured is such a way to reasonably accommodate redevelopment and the boundary adjustment will not rectify this reality.

   - OR -

   B. Approve the proposed request adjusting the City's common boundary with Kaysville City at 1322 South Main because the shape of the property will be better, although not good, for redevelopment; and direct staff to prepare an ordinance for consideration by the City Council.

160 S MAIN • P.O. BOX 160 • FARMINGTON, UT 84025
PHONE (801) 451-2383 • FAX (801) 451-2747
www.farmington.utah.gov

**BACKGROUND**

Lowell Johnson owns a parcel at 1322 South Main in Kaysville. He recently acquired land from UDOT that is adjacent to his property, but located in Farmington (see enclosed vicinity map). Mr. Johnson is requesting that the City de-annex, and Kaysville annex, this parcel which is approximately .4 acres in size. He does not know what he wants to do with the overall site. Possibilities include residential or commercial development. The City adopted a resolution on March 21, 2017 to further study and evaluate the request.

Respectively Submitted

David Petersen
Community Development Director

Review and Concur

Dave Millheim
City Manager

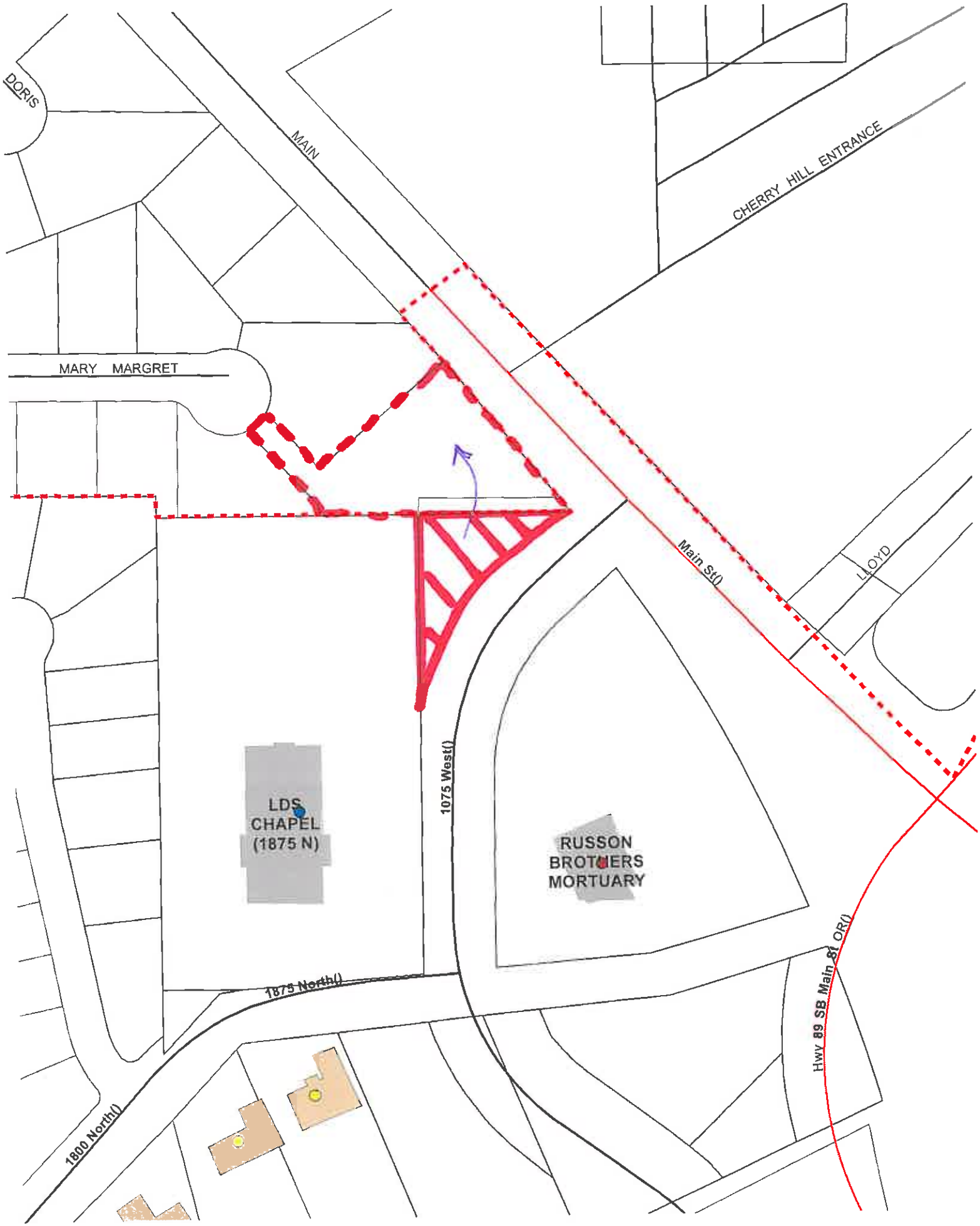
DORIS
MAIN
CHERRY HILL ENTRANCE
MARY MARGRET
Main St()
LLOYD
1075 West()
LDS
CHAPEL
(1875 N)
RUSSON
BROTHERS
MORTUARY
1875 North()
Hwy 89 SB Main St OR()
1800 North()

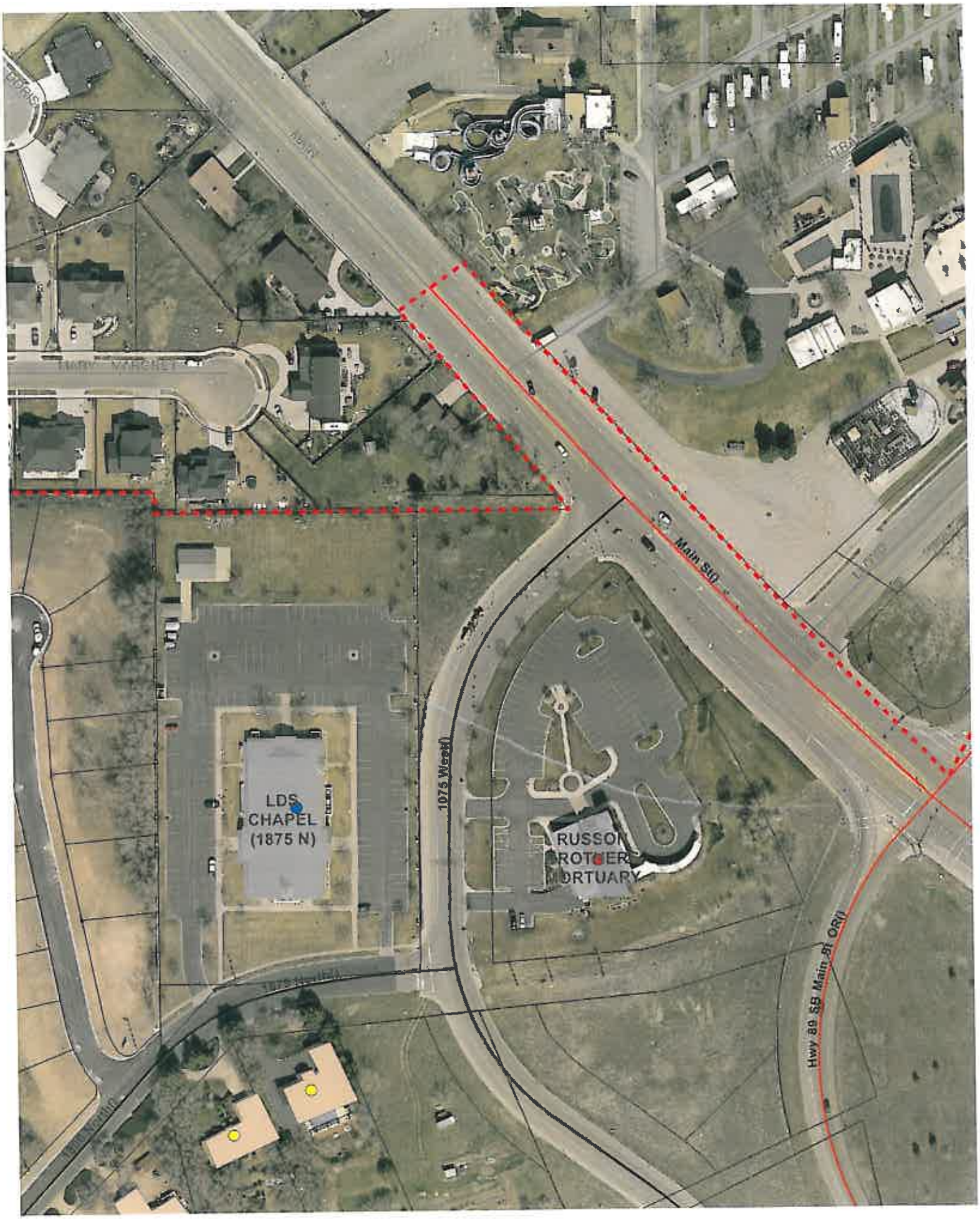
Main St
1075 West
LDS
CHAPEL
(1875 N)
RUSSON
ROTGER
MORTUARY
Hwy 89 SB Main St ORI

# CITY COUNCIL AGENDA

For Council Meeting:
June 6, 2017

**SUBJECT: Introduction of New Police Offices and Administration of Oath of Office**

**ACTION TO BE CONSIDERED:**

None

**GENERAL INFORMATION:**

Wayne Hansen, Police Chief will introduce new police officers, Kory Schlicte and Chris Flitton. Holly Gadd, City Recorder will administer the Oath of Office.

NOTE: Appointments must be scheduled 14 days prior to Council Meetings; discussion items should be submitted 7 days prior to Council meeting.

# CITY COUNCIL AGENDA

For Council Meeting:
June 6, 2017

**S U B J E C T: Approval of Kilgore Contracting to Construct the FY2018 Road Maintenance Project**

**ACTION TO BE CONSIDERED:**

Approve the contract and bid from Kilgore Contracting for the construction of road maintenance improvements in the amount of $586,147.17 to be paid from the street maintenance fund.

**GENERAL INFORMATION:**

See enclosed staff report prepared by Chad Boshell, City Engineer.

NOTE: Appointments must be scheduled 14 days prior to Council Meetings; discussion items should be submitted 7 days prior to Council meeting.

# FARMINGTON CITY

H. JAMES TALBOT
MAYOR

BRETT ANDERSON
DOUG ANDERSON
JOHN BILTON
BRIGHAM MELLOR
CORY RITZ
CITY COUNCIL

DAVE MILLHEIM
CITY MANAGER

City Council Staff Report

To: Honorable Mayor and City Council

From: Chad Boshell, City Engineer

Date: June ~~20~~ 6, 2017

SUBJECT: **CONSIDER APPROVAL OF KILGOR CONTRACTING TO CONSTRUCT THE FY 2018 ROAD MAINTENANCE PROJECT**

## RECOMMENDATION

Approve the contract and bid from Kilgore Contracting for the construction of road maintenance improvements in the amount of $586,147.17 to be paid from the street maintenance fund.

## BACKGROUND

The City received 4 bids for the FY 2018 Road Maintenance Project ranging from $586,147.17 to $744,162.38 and will begin construction in 2 to 3 weeks. The project includes road overlays, reconstruction, and chip seal along with other crack sealing and patching. City staff recommends awarding Kilgore Contracting the project. Attached is the contract between the City and the Contractor to do the work.

## SUPPLEMENTAL INFORMATION

1. Bid Summary
2. Contract

Respectively Submitted

Chad W. Boshell

Chad Boshell
City Engineer

Reviewed and Concur

Dave Mellheim

Dave Millheim
City Manager

160 S MAIN · P.O. BOX 160 · FARMINGTON, UT 84025
PHONE (801) 451-2383 · FAX (801) 451-2747
www.farmington.utah.gov

| FY 2018 Road Maintenance Project Bid Summary | |
|---|---|
| **Company** | **Bid Amount** |
| *Kilgore Construction* | $586,147.17 |
| *Advanced Paving* | $624,233.08 |
| *Staker Parson* | $694,627.35 |
| *Consolidated Paving* | $744,162.38 |

# SECTION 00520

## STANDARD FORM OF AGREEMENT

THIS AGREEMENT is by and between Farmington City ("Owner") and Kilgor _____ ("Contractor").

Owner and Contractor hereby agree as follows:

## ARTICLE 1 – WORK

1.01 Contractor shall complete all Work as specified or indicated in the Contract Documents. The Work is generally described as follows:

FY 2018 Road Maintenance Project

## ARTICLE 2 – THE PROJECT

2.01 The Project for which the Work under the Contract Documents may be the whole or only a part is generally described as follows:

Chip seal with fog coat, placing leveling course, deep patching, asphalt overlays, crack seal, and raising manholes and valves to grade.

## ARTICLE 3 – ENGINEER

3.01 The Project has been designed by Farmington City (Engineer), which is to act as Owner's representative, assume all duties and responsibilities, and have the rights and authority assigned to Engineer in the Contract Documents in connection with the completion of the Work in accordance with the Contract Documents.

## ARTICLE 4 – CONTRACT TIMES

4.01 *Time of the Essence*

A. All time limits for Milestones, if any, Substantial Completion, and completion and readiness for final payment as stated in the Contract Documents are of the essence of the Contract.

4.02 *Dates for Substantial Completion and Final Payment*

A. The Chip and Seal work will be completed by August 30, 2017 and all other Work will be substantially completed on or before September 30, 2017, and completed and ready for final payment in accordance with Paragraph 14.07 of the General Conditions on or before October 15, 2017.

4.02 *Liquidated Damages*

A. Contractor and Owner recognize that time is of the essence as stated in Paragraph 4.01 above and that Owner will suffer financial loss if the Work is not completed within the times specified in Paragraph 4.02 above, plus any extensions thereof allowed in accordance with Article 12 of the General Conditions. The parties also recognize the delays, expense, and difficulties involved in proving in a legal or arbitration proceeding the actual loss suffered by Owner if the Work is not completed on time. Accordingly, instead of requiring any such proof, Owner and Contractor agree that as liquidated damages for delay (but not as a penalty), Contractor shall pay Owner $200.00 for each day that expires after the time specified in Paragraph 4.02 above for Substantial Completion until the Work is substantially complete. After Substantial Completion, if Contractor shall neglect, refuse, or fail to complete the remaining Work within the Contract Time or any proper extension thereof granted by Owner, Contractor shall pay Owner $ 200.00 for each day that expires after the time specified in Paragraph 4.02 above for completion and readiness for final payment until the Work is completed and ready for final payment.

## ARTICLE 5 – CONTRACT PRICE

5.01 Owner shall pay Contractor for completion of the Work in accordance with the Contract Documents an amount in current funds equal to the sum of the amounts determined pursuant to Paragraph 5.01.A below:

A. For all Work, at the prices stated in Contractor's Bid, attached hereto as an exhibit.

## ARTICLE 6 – PAYMENT PROCEDURES

6.01 *Submittal and Processing of Payments*

A. Contractor shall submit Applications for Payment in accordance with Article 14 of the General Conditions. Applications for Payment will be processed by Engineer as provided in the General Conditions.

6.02 *Progress Payments; Retainage*

A. Owner shall make progress payments on account of the Contract Price on the basis of Contractor's Applications for Payment on or about the 1st day of each month during performance of the Work as provided in Paragraph 6.02.A.1 below. All such payments will be measured by the schedule of values established as provided in Paragraph 2.07.A of the General Conditions (and in the case of Unit Price Work based on the number of units completed) or, in the event there is no schedule of values, as provided in the General Requirements.

1. Prior to Substantial Completion, progress payments will be made in an amount equal to the percentage indicated below but, in each case, less the aggregate of payments previously made and less such amounts as Engineer may determine or

Owner may withhold, including but not limited to liquidated damages, in accordance with Paragraph 14.02 of the General Conditions.

a. 95 percent of Work completed (with the balance being retainage); and

b. 95 percent of cost of materials and equipment not incorporated in the Work (with the balance being retainage).

B. Upon Substantial Completion, Owner shall pay an amount sufficient to increase total payments to Contractor to 100 percent of the Work completed, less such amounts as Engineer shall determine in accordance with Paragraph 14.02.B.5 of the General Conditions and less 200 percent of Engineer's estimate of the value of Work to be completed or corrected as shown on the tentative list of items to be completed or corrected attached to the certificate of Substantial Completion.

6.03 *Final Payment*

A. Upon final completion and acceptance of the Work in accordance with Paragraph 14.07 of the General Conditions, Owner shall pay the remainder of the Contract Price as recommended by Engineer as provided in said Paragraph 14.07.

## ARTICLE 7 – INTEREST

7.01 All moneys not paid when due as provided in Article 14 of the General Conditions shall bear interest at the rate allowed by the State.

## ARTICLE 8 – CONTRACTOR'S REPRESENTATIONS

8.01 In order to induce Owner to enter into this Agreement, Contractor makes the following representations:

A. Contractor has examined and carefully studied the Contract Documents and the other related data identified in the Bidding Documents.

B. Contractor has visited the Site and become familiar with and is satisfied as to the general, local, and Site conditions that may affect cost, progress, and performance of the Work.

C. Contractor is familiar with and is satisfied as to all federal, state, and local Laws and Regulations that may affect cost, progress, and performance of the Work.

D. Contractor has carefully studied all: (1) reports of explorations and tests of subsurface conditions at or contiguous to the Site and all drawings of physical conditions relating to existing surface or subsurface structures at the Site (except Underground Facilities), if any, that have been identified in Paragraph SC-4.02 of the Supplementary Conditions as containing reliable "technical data," and (2) reports and drawings of Hazardous Environmental Conditions, if any, at the Site that have been

identified in Paragraph SC-4.06 of the Supplementary Conditions as containing reliable "technical data."

E. Contractor has considered the information known to Contractor; information commonly known to contractors doing business in the locality of the Site; information and observations obtained from visits to the Site; the Contract Documents; and the Site-related reports and drawings identified in the Contract Documents, with respect to the effect of such information, observations, and documents on (1) the cost, progress, and performance of the Work; (2) the means, methods, techniques, sequences, and procedures of construction to be employed by Contractor, including any specific means, methods, techniques, sequences, and procedures of construction expressly required by the Contract Documents; and (3) Contractor's safety precautions and programs.

F. Based on the information and observations referred to in Paragraph 8.01.E above, Contractor does not consider that further examinations, investigations, explorations, tests, studies, or data are necessary for the performance of the Work at the Contract Price, within the Contract Times, and in accordance with the other terms and conditions of the Contract Documents.

G. Contractor is aware of the general nature of work to be performed by Owner and others at the Site that relates to the Work as indicated in the Contract Documents.

H. Contractor has given Engineer written notice of all conflicts, errors, ambiguities, or discrepancies that Contractor has discovered in the Contract Documents, and the written resolution thereof by Engineer is acceptable to Contractor.

I. The Contract Documents are generally sufficient to indicate and convey understanding of all terms and conditions for performance and furnishing of the Work.

## ARTICLE 9 – CONTRACT DOCUMENTS

9.01 *Contents*

A. The Contract Documents consist of the following:

1. This Agreement (Pages 1 through 7, inclusive)
2. Performance bond (Pages 1 through 3, inclusive)
3. Payment bond (Pages 1 through 3, inclusive)
4. General Conditions (Pages 1 through 62, inclusive)
5. Supplementary Conditions (Pages 1 through 15, inclusive)

6. Specifications as listed in the table of contents of the Project Manual.

7. Drawings consisting of 1 sheet with each sheet bearing the following general title: "FY 2018 Road Maintenance Project."

8. Addendum _____.

9. Exhibits to this Agreement (enumerated as follows):

   a. Contractor's Bid

10. The following which may be delivered or issued on or after the Effective Date of the Agreement and are not attached hereto:

    a. Notice to Proceed

    b. Work Change Directives

    c. Change Orders

B. The documents listed in Paragraph 9.01.A are attached to this Agreement (except as expressly noted otherwise above).

C. There are no Contract Documents other than those listed above in this Article 9.

D. The Contract Documents may only be amended, modified, or supplemented as provided in Paragraph 3.04 of the General Conditions.

## ARTICLE 10 – MISCELLANEOUS

10.01 *Terms*

A. Terms used in this Agreement will have the meanings stated in the General Conditions and the Supplementary Conditions.

10.02 *Assignment of Contract*

A. No assignment by a party hereto of any rights under or interests in the Contract will be binding on another party hereto without the written consent of the party sought to be bound; and, specifically but without limitation, moneys that may become due and moneys that are due may not be assigned without such consent (except to the extent that the effect of this restriction may be limited by law), and unless specifically stated to the contrary in any written consent to an assignment, no assignment will release or discharge the assignor from any duty or responsibility under the Contract Documents.

10.03 *Successors and Assigns*

A. Owner and Contractor each binds itself, its partners, successors, assigns, and legal representatives to the other party hereto, its partners, successors, assigns, and legal representatives in respect to all covenants, agreements, and obligations contained in the Contract Documents.

10.04 *Severability*

A. Any provision or part of the Contract Documents held to be void or unenforceable under any Law or Regulation shall be deemed stricken, and all remaining provisions shall continue to be valid and binding upon Owner and Contractor, who agree that the Contract Documents shall be reformed to replace such stricken provision or part thereof with a valid and enforceable provision that comes as close as possible to expressing the intention of the stricken provision.

10.05 *Contractor's Certifications*

A. Contractor certifies that it has not engaged in corrupt, fraudulent, collusive, or coercive practices in competing for or in executing the Contract. For the purposes of this Paragraph 10.05:

1. "corrupt practice" means the offering, giving, receiving, or soliciting of anything of value likely to influence the action of a public official in the bidding process or in the Contract execution;

2. "fraudulent practice" means an intentional misrepresentation of facts made (a) to influence the bidding process or the execution of the Contract to the detriment of Owner, (b) to establish Bid or Contract prices at artificial non-competitive levels, or (c) to deprive Owner of the benefits of free and open competition;

3. "collusive practice" means a scheme or arrangement between two or more Bidders, with or without the knowledge of Owner, a purpose of which is to establish Bid prices at artificial, non-competitive levels; and

4. "coercive practice" means harming or threatening to harm, directly or indirectly, persons or their property to influence their participation in the bidding process or affect the execution of the Contract.

IN WITNESS WHEREOF, Owner and Contractor have signed this Agreement. Counterparts have been delivered to Owner and Contractor. All portions of the Contract Documents have been signed or have been identified by Owner and Contractor or on their behalf.

This Agreement will be effective on _____ (which is the Effective Date of the Agreement).

OWNER:

Farmington City

By: _____

Title: _____

Attest _____

Title: _____

Address for giving notices:

Farmington City

PO Box 160

Farmington, Utah 84025

(If Owner is a corporation, attach evidence of authority to sign. If Owner is a public body, attach evidence of authority to sign and resolution or other documents authorizing execution of this Agreement.)

CONTRACTOR

_____

By: _____

Title: _____

(If Contractor is a corporation, a partnership, or a joint venture, attach evidence of authority to sign.)

Attest: _____

Title: _____

Address for giving notices:

_____

_____

_____

License No.: _____

(Where applicable)

Agent for service of process:

_____

**END OF SECTION**

# SECTION 00410

# BID FORM

Farmington City

FY 2018 Road Maintenance Project

Bids Opened: 2:00 p.m. May 18, 2017

## TABLE OF CONTENTS

Page

Article 1 – Bid Recipient ..... 3
Article 2 – Bidder's Acknowledgements ..... 3
Article 3 – Bidder's Representations ..... 3
Article 4 – Bidder's Certification ..... 4
Article 5 – Basis of Bid ..... 5
Article 6 – Time of Completion ..... 9
Article 7 – Attachments to This Bid ..... 9
Article 8 – Defined Terms ..... 9
Article 9 – Bid Submittal ..... 9

## ARTICLE 1 – BID RECIPIENT

1.01 This Bid is submitted to:

Farmington City, 720 West 100 North, Farmington, Utah, 84025

1.02 The undersigned Bidder proposes and agrees, if this Bid is accepted, to enter into an Agreement with Owner in the form included in the Bidding Documents to perform all Work as specified or indicated in the Bidding Documents for the prices and within the times indicated in this Bid and in accordance with the other terms and conditions of the Bidding Documents.

## ARTICLE 2 – BIDDER'S ACKNOWLEDGEMENTS

2.01 Bidder accepts all of the terms and conditions of the Instructions to Bidders, including without limitation those dealing with the disposition of Bid security. This Bid will remain subject to acceptance for 60 days after the Bid opening, or for such longer period of time that Bidder may agree to in writing upon request of Owner.

## ARTICLE 3 – BIDDER'S REPRESENTATIONS

3.01 In submitting this Bid, Bidder represents that:

A. Bidder has examined and carefully studied the Bidding Documents, other related data identified in the Bidding Documents, and the following Addenda, receipt of which is hereby acknowledged:

| Addendum No. | Addendum Date |
|---|---|
| None | |
| | |
| | |

B. Bidder has visited the Site and become familiar with and is satisfied as to the general, local, and Site conditions that may affect cost, progress, and performance of the Work.

C. Bidder is familiar with and is satisfied as to all Laws and Regulations that may affect cost, progress, and performance of the Work.

D. Bidder has carefully studied all: (1) reports of explorations and tests of subsurface conditions at or contiguous to the Site and all drawings of physical conditions relating to existing surface or subsurface structures at the Site (except Underground Facilities) that have been identified in SC-4.02 as containing reliable "technical data," and (2) reports and drawings of Hazardous Environmental Conditions, if any, at the Site that have been identified in SC-4.06 as containing reliable "technical data."

E. Bidder has considered the information known to Bidder; information commonly known to contractors doing business in the locality of the Site; information and observations obtained from visits to the Site; the Bidding Documents; and the Site-related reports and drawings

identified in the Bidding Documents, with respect to the effect of such information, observations, and documents on (1) the cost, progress, and performance of the Work; (2) the means, methods, techniques, sequences, and procedures of construction to be employed by Bidder, including applying the specific means, methods, techniques, sequences, and procedures of construction expressly required by the Bidding Documents; and (3) Bidder's safety precautions and programs.

F. Based on the information and observations referred to in Paragraph 3.01.E above, Bidder does not consider that further examinations, investigations, explorations, tests, studies, or data are necessary for the determination of this Bid for performance of the Work at the price(s) bid and within the times required, and in accordance with the other terms and conditions of the Bidding Documents.

G. Bidder is aware of the general nature of work to be performed by Owner and others at the Site that relates to the Work as indicated in the Bidding Documents.

H. Bidder has given Engineer written notice of all conflicts, errors, ambiguities, or discrepancies that Bidder has discovered in the Bidding Documents, and the written resolution thereof by Engineer is acceptable to Bidder.

A. The Bidding Documents are generally sufficient to indicate and convey understanding of all terms and conditions for the performance of the Work for which this Bid is submitted.

## ARTICLE 4 – BIDDER'S CERTIFICATION

4.01 Bidder certifies that:

A. This Bid is genuine and not made in the interest of or on behalf of any undisclosed individual or entity and is not submitted in conformity with any collusive agreement or rules of any group, association, organization, or corporation;

B. Bidder has not directly or indirectly induced or solicited any other Bidder to submit a false or sham Bid;

C. Bidder has not solicited or induced any individual or entity to refrain from bidding; and

D. Bidder has not engaged in corrupt, fraudulent, collusive, or coercive practices in competing for the Contract. For the purposes of this Paragraph 4.01.D:

1. "corrupt practice" means the offering, giving, receiving, or soliciting of anything of value likely to influence the action of a public official in the bidding process;

2. "fraudulent practice" means an intentional misrepresentation of facts made (a) to influence the bidding process to the detriment of Owner, (b) to establish bid prices at artificial non-competitive levels, or (c) to deprive Owner of the benefits of free and open competition;

3. "collusive practice" means a scheme or arrangement between two or more Bidders, with or without the knowledge of Owner, a purpose of which is to establish bid prices at artificial, non-competitive levels; and

4. "Coercive practice" means harming or threatening to harm, directly or indirectly, persons or their property to influence their participation in the bidding process or affect the execution of the Contract.

## ARTICLE 5 – BASIS OF BID

5.01 Bidder will complete the Work in accordance with the Contract Documents for the following price(s):

### BID SCHEDULE

1340 South (South Frontage Road to 200 East)

| Item No. | Description | Quantity | Units | Unit Price | Amount |
|---|---|---|---|---|---|
| 1 | 3" Overlay | 8016 | SY | 10.00 | 80 160.00 |
| 2 | 2" Mill | 8016 | SY | 1.42 | 11,382.72 |
| 3 | Manhole raised to grade | 15 | EA | 625.00 | 9,375.00 |
| 4 | Water valve raised to grade | 11 | EA | 450.00 | 4,950.00 |

Subtotal: 105,867.72

110 W (1150 S to around loop)

| Item No. | Description | Quantity | Units | Unit Price | Amount |
|---|---|---|---|---|---|
| 1 | Manhole raised to grade | 24 | EA | 405.00 | 9,720.00 |
| 2 | Water valve raised to grade | 17 | EA | 275.00 | 4,675.00 |
| 3 | 2" overlay | 4664 | SY | 6.90 | 32,181.60 |

Subtotal: 46,576.60

Cannon Drive and Cannon Cir (1150 S to 1340 S)

| Item No. | Description | Quantity | Units | Unit Price | Amount |
|---|---|---|---|---|---|
| 1 | Manhole raised to grade | 12 | EA | 405.00 | 4,860.00 |
| 2 | Water valve raised to grade | 10 | EA | 275.00 | 2,750.00 |
| 4 | 2" overlay | 5091 | SY | 6.90 | 35,127.90 |

Subtotal: 42,737.90

450 E Lakeview Way (Spencer Way to the End)

| Item No. | Description | Quantity | Units | Unit Price | Amount |
|---|---|---|---|---|---|
| 1 | Manhole raised to grade | 4 | EA | 405.00 | 1,620.00 |
| 2 | Water valve raised to grade | 3 | EA | 275.00 | 825.00 |
| 3 | 2" overlay | 1478 | SY | 6.90 | 10,198.20 |

Subtotal: 12,643.20

1525 W (Clark Ln to Buffalo Ranch Trail)

| Item No. | Description | Quantity | Units | Unit Price | Amount |
|---|---|---|---|---|---|
| 1 | 2" overlay | 6977 | SY | 6.90 | 48,141.30 |
| 2 | Manhole raised to grade | 4 | EA | 405.00 | 1,620.00 |
| | Water valve raised to grade | 10 | EA | 275.00 | 2,750.00 |

Subtotal:

Somerset Rd (Kensington to Ramsgate)

| Item No. | Description | Quantity | Units | Unit Price | Amount |
|---|---|---|---|---|---|
| 1 | 2" overlay | 1563 | SY | 6.90 | 10,784.70 |
| 3 | Manhole raised to grade | 3 | EA | 405.00 | 1,215.00 |
| 4 | Water valve raised to grade | 3 | EA | ~~25~~ 275.00 | 825.00 |

Subtotal: 12,824.70

1875 W (Burke Ln to 950 N)

| Item No. | Description | Quantity | Units | Unit Price | Amount |
|---|---|---|---|---|---|
| 1 | 2 " overlay | 6898 | SY | 6.90 | 47,596.20 |
| 2 | Manhole raised to grade | 20 | EA | 405.00 | 8,100.00 |
| 3 | Water valve raised to grade | 23 | EA | 275.00 | 6,325.00 |

Subtotal: 62,021.20

950 N (1875 W to 2050 W)

| Item No. | Description | Quantity | Units | Unit Price | Amount |
|---|---|---|---|---|---|
| 1 | 2" overlay | 2744 | SY | 6.90 | 18,933.60 |
| 2 | Manhole raised to grade | 1 | EA | 405.00 | 405.00 |
| 3 | Water valve raised to grade | 6 | EA | 275.00 | 1,650.00 |

Subtotal: 20,988.60

Station Parkway (N of McDonalds to Park Ln)

| Item No. | Description | Quantity | Units | Unit Price | Amount |
|---|---|---|---|---|---|
| 1 | Class A Chip Seal | 7763 | SY | 1.85 | 14,361.55 |

Subtotal: 14,361.55

Station Parkway (Park Ln to Train Station)

| Item No. | Description | Quantity | Units | Unit Price | Amount |
|---|---|---|---|---|---|
| 1 | Class A Chip Seal | 11143 | SY | 1.85 | 20,614.55 |

Subtotal: 20,614.55

Clark Ln ( Legacy Bridge to East end of Roundabout)

| Item No. | Description | Quantity | Units | Unit Price | Amount |
|---|---|---|---|---|---|
| 1 | Class A Chip Seal | 23952 | SY | 1.85 | 44,311.20 |
| 2 | Level Course | 50 | TON | 69.00 | 3,450.00 |

Subtotal: 47,761.20

**West State (Bridge to 200 W)**

| Item No. | Description | Quantity | Units | Unit Price | Amount |
|---|---|---|---|---|---|
| 1 | Class A Chip Seal | 6629 | SY | 1.85 | 12,263.65 |
| 2 | Level Course | 25 | TON | 69.00 | 1,725.00 |

**Subtotal:** 13,988.65

**2017 – 18 Level Course**

| Item No. | Location | Quantity | Units | Unit Price | Amount |
|---|---|---|---|---|---|
| 1 | 1525 W West of Buffalo Ranch Trail | 100 | TONS | 69.00 | 6,900.00 |
| 2 | 400 Tons Leveling Throughout The City | 400 | TONS | 69.00 | 27,600.00 |

**Subtotal:** 34,500.00

**2017 – 18 Proposed Crack Seal**

| Item No. | Description | Quantity | Units | Unit Price | Amount |
|---|---|---|---|---|---|
| 1 | 50 Tons Crack Seal Throughout The City | 50 | TONS | 1975.00 | 98,750.00 |

**Subtotal:** 98,750.00

**Project Total:** $586,147.17

For work listed above shown on the drawings, I/we agree to perform for the sum of the unit price amounts at:

Five hundred eighty six thousand one hundred forty seven dollars and seventeen cents DOLLARS ($ 586 147.17

(Words) (Numbers)

(In the case of discrepancy, written amount shall govern)

Unit Prices have been computed in accordance with Paragraph 11.03.B of the General Conditions.

Bidder acknowledges that estimated quantities are not guaranteed, and are solely for the purpose of comparison of Bids, and final payment for all unit price Bid items will be based on actual quantities, determined as provided in the Contract Documents.

**NOTES:**

- Quantities are for bid purposes only and are based on engineering estimates. Farmington City reserves the right to increase or decrease work by up to 100% at the unit price stated. Portions of the work may be deleted in their entirety to accommodate the budget.
- The contractor is responsible to verify all material quantities prior to placement.
- The raising of the manhole and valves to grade is to be done within two weeks of when asphalt overlays are completed.

- **All Chip and Seal work is to be completed by August 30, 2017**

## ARTICLE 6 – TIME OF COMPLETION

6.01 Bidder agrees that Chip and Seal work shall be completed by August 30, 2017 and all other Work will be substantially complete on or before September 30, 2017, and will be completed and ready for final payment in accordance with Paragraph 14.07 of the General Conditions on or before October 15, 2017. Bidder accepts the provisions of the Agreement as to liquidated damages.

## ARTICLE 7 – ATTACHMENTS TO THIS BID

7.01 The following documents are submitted with and made a condition of this Bid:

A. Required Bid security in the form of a certified check, or bank money order, issued by a surety meeting the requirements of Paragraphs 5.01 and 5.02 of the General Conditions;

B. Evidence of authority to do business in the state of the Project; or a written covenant to obtain such license within the time for acceptance of Bids;

## ARTICLE 8 – DEFINED TERMS

8.01 The terms used in this Bid with initial capital letters have the meanings stated in the Instructions to Bidders, the General Conditions, and the Supplementary Conditions.

## ARTICLE 9 – BID SUBMITTAL

9.01 This Bid is submitted by:

If Bidder is:

An Individual

Name (typed or printed): _____

By: _____
(Individual's signature)

Doing business as: _____

A Partnership

Partnership Name: _____

By: _____
(Signature of general partner -- attach evidence of authority to sign)

Name (typed or printed): _____

A Corporation

Corporation Name: Kilgore Contracting (SEAL)

State of Incorporation: Delaware

Type (General Business, Professional, Service, Limited Liability): LLC

By: _____
(Signature -- attach evidence of authority to sign)

Name (typed or printed): Jason Kilgore

Title: ~~COO~~ CEO
(CORPORATE SEAL)

Attest Ashleigh Griffith

Date of Qualification to do business in *Utah* is 7/1/16.

A Joint Venture

Name of Joint Venture: _____

First Joint Venturer Name: _____ (SEAL)

By: _____
(Signature of first joint venture partner -- attach evidence of authority to sign)

Name (typed or printed): _____

Title: _____

Second Joint Venturer Name: _____ (SEAL)

By: _____
(Signature of second joint venture partner -- attach evidence of authority to sign)

Name (typed or printed): _____

Title: _____

(Each joint venturer must sign. The manner of signing for each individual, partnership, and corporation that is a party to the joint venture should be in the manner indicated above.)

Bidder's Business Address 7057 West 2100 South
Salt Lake City Utah 84128

Phone No. 801-250-0132 Fax No. 801-250-0083

E-mail Joe.lindsey@Kilgore Contracting.com (if available)

SUBMITTED on May 18, 20 17.

State Contractor License No. 7741778-5501.

**END OF SECTION**

## SECTION 00520

## STANDARD FORM OF AGREEMENT

THIS AGREEMENT is by and between Farmington City ("Owner") and Kilgor _____ ("Contractor").

Owner and Contractor hereby agree as follows:

### ARTICLE 1 – WORK

1.01 Contractor shall complete all Work as specified or indicated in the Contract Documents. The Work is generally described as follows:

FY 2018 Road Maintenance Project

### ARTICLE 2 – THE PROJECT

2.01 The Project for which the Work under the Contract Documents may be the whole or only a part is generally described as follows:

Chip seal with fog coat, placing leveling course, deep patching, asphalt overlays, crack seal, and raising manholes and valves to grade.

### ARTICLE 3 – ENGINEER

3.01 The Project has been designed by Farmington City (Engineer), which is to act as Owner's representative, assume all duties and responsibilities, and have the rights and authority assigned to Engineer in the Contract Documents in connection with the completion of the Work in accordance with the Contract Documents.

### ARTICLE 4 – CONTRACT TIMES

4.01 *Time of the Essence*

A. All time limits for Milestones, if any, Substantial Completion, and completion and readiness for final payment as stated in the Contract Documents are of the essence of the Contract.

4.02 *Dates for Substantial Completion and Final Payment*

A. The Chip and Seal work will be completed by August 30, 2017 and all other Work will be substantially completed on or before September 30, 2017, and completed and ready for final payment in accordance with Paragraph 14.07 of the General Conditions on or before October 15, 2017.

4.02 *Liquidated Damages*

A. Contractor and Owner recognize that time is of the essence as stated in Paragraph 4.01 above and that Owner will suffer financial loss if the Work is not completed within the times specified in Paragraph 4.02 above, plus any extensions thereof allowed in accordance with Article 12 of the General Conditions. The parties also recognize the delays, expense, and difficulties involved in proving in a legal or arbitration proceeding the actual loss suffered by Owner if the Work is not completed on time. Accordingly, instead of requiring any such proof, Owner and Contractor agree that as liquidated damages for delay (but not as a penalty), Contractor shall pay Owner $200.00 for each day that expires after the time specified in Paragraph 4.02 above for Substantial Completion until the Work is substantially complete. After Substantial Completion, if Contractor shall neglect, refuse, or fail to complete the remaining Work within the Contract Time or any proper extension thereof granted by Owner, Contractor shall pay Owner $ 200.00 for each day that expires after the time specified in Paragraph 4.02 above for completion and readiness for final payment until the Work is completed and ready for final payment.

## ARTICLE 5 – CONTRACT PRICE

5.01 Owner shall pay Contractor for completion of the Work in accordance with the Contract Documents an amount in current funds equal to the sum of the amounts determined pursuant to Paragraph 5.01.A below:

A. For all Work, at the prices stated in Contractor's Bid, attached hereto as an exhibit.

## ARTICLE 6 – PAYMENT PROCEDURES

6.01 *Submittal and Processing of Payments*

A. Contractor shall submit Applications for Payment in accordance with Article 14 of the General Conditions. Applications for Payment will be processed by Engineer as provided in the General Conditions.

6.02 *Progress Payments; Retainage*

A. Owner shall make progress payments on account of the Contract Price on the basis of Contractor's Applications for Payment on or about the 1st day of each month during performance of the Work as provided in Paragraph 6.02.A.1 below. All such payments will be measured by the schedule of values established as provided in Paragraph 2.07.A of the General Conditions (and in the case of Unit Price Work based on the number of units completed) or, in the event there is no schedule of values, as provided in the General Requirements.

1. Prior to Substantial Completion, progress payments will be made in an amount equal to the percentage indicated below but, in each case, less the aggregate of payments previously made and less such amounts as Engineer may determine or

Owner may withhold, including but not limited to liquidated damages, in accordance with Paragraph 14.02 of the General Conditions.

a. 95 percent of Work completed (with the balance being retainage); and

b. 95 percent of cost of materials and equipment not incorporated in the Work (with the balance being retainage).

B. Upon Substantial Completion, Owner shall pay an amount sufficient to increase total payments to Contractor to 100 percent of the Work completed, less such amounts as Engineer shall determine in accordance with Paragraph 14.02.B.5 of the General Conditions and less 200 percent of Engineer's estimate of the value of Work to be completed or corrected as shown on the tentative list of items to be completed or corrected attached to the certificate of Substantial Completion.

6.03 *Final Payment*

A. Upon final completion and acceptance of the Work in accordance with Paragraph 14.07 of the General Conditions, Owner shall pay the remainder of the Contract Price as recommended by Engineer as provided in said Paragraph 14.07.

## ARTICLE 7 – INTEREST

7.01 All moneys not paid when due as provided in Article 14 of the General Conditions shall bear interest at the rate allowed by the State.

## ARTICLE 8 – CONTRACTOR'S REPRESENTATIONS

8.01 In order to induce Owner to enter into this Agreement, Contractor makes the following representations:

A. Contractor has examined and carefully studied the Contract Documents and the other related data identified in the Bidding Documents.

B. Contractor has visited the Site and become familiar with and is satisfied as to the general, local, and Site conditions that may affect cost, progress, and performance of the Work.

C. Contractor is familiar with and is satisfied as to all federal, state, and local Laws and Regulations that may affect cost, progress, and performance of the Work.

D. Contractor has carefully studied all: (1) reports of explorations and tests of subsurface conditions at or contiguous to the Site and all drawings of physical conditions relating to existing surface or subsurface structures at the Site (except Underground Facilities), if any, that have been identified in Paragraph SC-4.02 of the Supplementary Conditions as containing reliable "technical data," and (2) reports and drawings of Hazardous Environmental Conditions, if any, at the Site that have been

identified in Paragraph SC-4.06 of the Supplementary Conditions as containing reliable "technical data."

E. Contractor has considered the information known to Contractor; information commonly known to contractors doing business in the locality of the Site; information and observations obtained from visits to the Site; the Contract Documents; and the Site-related reports and drawings identified in the Contract Documents, with respect to the effect of such information, observations, and documents on (1) the cost, progress, and performance of the Work; (2) the means, methods, techniques, sequences, and procedures of construction to be employed by Contractor, including any specific means, methods, techniques, sequences, and procedures of construction expressly required by the Contract Documents; and (3) Contractor's safety precautions and programs.

F. Based on the information and observations referred to in Paragraph 8.01.E above, Contractor does not consider that further examinations, investigations, explorations, tests, studies, or data are necessary for the performance of the Work at the Contract Price, within the Contract Times, and in accordance with the other terms and conditions of the Contract Documents.

G. Contractor is aware of the general nature of work to be performed by Owner and others at the Site that relates to the Work as indicated in the Contract Documents.

H. Contractor has given Engineer written notice of all conflicts, errors, ambiguities, or discrepancies that Contractor has discovered in the Contract Documents, and the written resolution thereof by Engineer is acceptable to Contractor.

I. The Contract Documents are generally sufficient to indicate and convey understanding of all terms and conditions for performance and furnishing of the Work.

## ARTICLE 9 – CONTRACT DOCUMENTS

9.01 *Contents*

A. The Contract Documents consist of the following:

1. This Agreement (Pages 1 through 7, inclusive)
2. Performance bond (Pages 1 through 3, inclusive)
3. Payment bond (Pages 1 through 3, inclusive)
4. General Conditions (Pages 1 through 62, inclusive)
5. Supplementary Conditions (Pages 1 through 15, inclusive)

6. Specifications as listed in the table of contents of the Project Manual.

7. Drawings consisting of 1 sheet with each sheet bearing the following general title: "FY 2018 Road Maintenance Project."

8. Addendum _____.

9. Exhibits to this Agreement (enumerated as follows):

   a. Contractor's Bid

10. The following which may be delivered or issued on or after the Effective Date of the Agreement and are not attached hereto:

    a. Notice to Proceed

    b. Work Change Directives

    c. Change Orders

B. The documents listed in Paragraph 9.01.A are attached to this Agreement (except as expressly noted otherwise above).

C. There are no Contract Documents other than those listed above in this Article 9.

D. The Contract Documents may only be amended, modified, or supplemented as provided in Paragraph 3.04 of the General Conditions.

## ARTICLE 10 – MISCELLANEOUS

10.01 *Terms*

A. Terms used in this Agreement will have the meanings stated in the General Conditions and the Supplementary Conditions.

10.02 *Assignment of Contract*

A. No assignment by a party hereto of any rights under or interests in the Contract will be binding on another party hereto without the written consent of the party sought to be bound; and, specifically but without limitation, moneys that may become due and moneys that are due may not be assigned without such consent (except to the extent that the effect of this restriction may be limited by law), and unless specifically stated to the contrary in any written consent to an assignment, no assignment will release or discharge the assignor from any duty or responsibility under the Contract Documents.

10.03 *Successors and Assigns*

A. Owner and Contractor each binds itself, its partners, successors, assigns, and legal representatives to the other party hereto, its partners, successors, assigns, and legal representatives in respect to all covenants, agreements, and obligations contained in the Contract Documents.

10.04 *Severability*

A. Any provision or part of the Contract Documents held to be void or unenforceable under any Law or Regulation shall be deemed stricken, and all remaining provisions shall continue to be valid and binding upon Owner and Contractor, who agree that the Contract Documents shall be reformed to replace such stricken provision or part thereof with a valid and enforceable provision that comes as close as possible to expressing the intention of the stricken provision.

10.05 *Contractor's Certifications*

A. Contractor certifies that it has not engaged in corrupt, fraudulent, collusive, or coercive practices in competing for or in executing the Contract. For the purposes of this Paragraph 10.05:

1. "corrupt practice" means the offering, giving, receiving, or soliciting of anything of value likely to influence the action of a public official in the bidding process or in the Contract execution;

2. "fraudulent practice" means an intentional misrepresentation of facts made (a) to influence the bidding process or the execution of the Contract to the detriment of Owner, (b) to establish Bid or Contract prices at artificial non-competitive levels, or (c) to deprive Owner of the benefits of free and open competition;

3. "collusive practice" means a scheme or arrangement between two or more Bidders, with or without the knowledge of Owner, a purpose of which is to establish Bid prices at artificial, non-competitive levels; and

4. "coercive practice" means harming or threatening to harm, directly or indirectly, persons or their property to influence their participation in the bidding process or affect the execution of the Contract.

IN WITNESS WHEREOF, Owner and Contractor have signed this Agreement. Counterparts have been delivered to Owner and Contractor. All portions of the Contract Documents have been signed or have been identified by Owner and Contractor or on their behalf.

This Agreement will be effective on _____ (which is the Effective Date of the Agreement).

OWNER:

Farmington City _____

By: _____

Title: _____

Attest _____

Title: _____

Address for giving notices:

Farmington City

PO Box 160

Farmington, Utah 84025

(If Owner is a corporation, attach evidence of authority to sign. If Owner is a public body, attach evidence of authority to sign and resolution or other documents authorizing execution of this Agreement.)

CONTRACTOR

_____

By: _____

Title: _____

(If Contractor is a corporation, a partnership, or a joint venture, attach evidence of authority to sign.)

Attest: _____

Title: _____

Address for giving notices:

_____

_____

_____

License No.: _____
(Where applicable)

Agent for service of process:

_____

**END OF SECTION**

# SECTION 00410

# BID FORM

Farmington City

FY 2018 Road Maintenance Project

Bids Opened: 2:00 p.m. May 18, 2017

## TABLE OF CONTENTS

Page

Article 1 – Bid Recipient ..... 3
Article 2 – Bidder's Acknowledgements ..... 3
Article 3 – Bidder's Representations ..... 3
Article 4 – Bidder's Certification ..... 4
Article 5 – Basis of Bid ..... 5
Article 6 – Time of Completion ..... 9
Article 7 – Attachments to This Bid ..... 9
Article 8 – Defined Terms ..... 9
Article 9 – Bid Submittal ..... 9

## ARTICLE 1 – BID RECIPIENT

1.01 This Bid is submitted to:

Farmington City, 720 West 100 North, Farmington, Utah, 84025

1.02 The undersigned Bidder proposes and agrees, if this Bid is accepted, to enter into an Agreement with Owner in the form included in the Bidding Documents to perform all Work as specified or indicated in the Bidding Documents for the prices and within the times indicated in this Bid and in accordance with the other terms and conditions of the Bidding Documents.

## ARTICLE 2 – BIDDER'S ACKNOWLEDGEMENTS

2.01 Bidder accepts all of the terms and conditions of the Instructions to Bidders, including without limitation those dealing with the disposition of Bid security. This Bid will remain subject to acceptance for 60 days after the Bid opening, or for such longer period of time that Bidder may agree to in writing upon request of Owner.

## ARTICLE 3 – BIDDER'S REPRESENTATIONS

3.01 In submitting this Bid, Bidder represents that:

A. Bidder has examined and carefully studied the Bidding Documents, other related data identified in the Bidding Documents, and the following Addenda, receipt of which is hereby acknowledged:

| Addendum No. | Addendum Date |
|---|---|
| None | |
| | |
| | |

B. Bidder has visited the Site and become familiar with and is satisfied as to the general, local, and Site conditions that may affect cost, progress, and performance of the Work.

C. Bidder is familiar with and is satisfied as to all Laws and Regulations that may affect cost, progress, and performance of the Work.

D. Bidder has carefully studied all: (1) reports of explorations and tests of subsurface conditions at or contiguous to the Site and all drawings of physical conditions relating to existing surface or subsurface structures at the Site (except Underground Facilities) that have been identified in SC-4.02 as containing reliable "technical data," and (2) reports and drawings of Hazardous Environmental Conditions, if any, at the Site that have been identified in SC-4.06 as containing reliable "technical data."

E. Bidder has considered the information known to Bidder; information commonly known to contractors doing business in the locality of the Site; information and observations obtained from visits to the Site; the Bidding Documents; and the Site-related reports and drawings

identified in the Bidding Documents, with respect to the effect of such information, observations, and documents on (1) the cost, progress, and performance of the Work; (2) the means, methods, techniques, sequences, and procedures of construction to be employed by Bidder, including applying the specific means, methods, techniques, sequences, and procedures of construction expressly required by the Bidding Documents; and (3) Bidder's safety precautions and programs.

F. Based on the information and observations referred to in Paragraph 3.01.E above, Bidder does not consider that further examinations, investigations, explorations, tests, studies, or data are necessary for the determination of this Bid for performance of the Work at the price(s) bid and within the times required, and in accordance with the other terms and conditions of the Bidding Documents.

G. Bidder is aware of the general nature of work to be performed by Owner and others at the Site that relates to the Work as indicated in the Bidding Documents.

H. Bidder has given Engineer written notice of all conflicts, errors, ambiguities, or discrepancies that Bidder has discovered in the Bidding Documents, and the written resolution thereof by Engineer is acceptable to Bidder.

A. The Bidding Documents are generally sufficient to indicate and convey understanding of all terms and conditions for the performance of the Work for which this Bid is submitted.

## ARTICLE 4 – BIDDER'S CERTIFICATION

4.01 Bidder certifies that:

A. This Bid is genuine and not made in the interest of or on behalf of any undisclosed individual or entity and is not submitted in conformity with any collusive agreement or rules of any group, association, organization, or corporation;

B. Bidder has not directly or indirectly induced or solicited any other Bidder to submit a false or sham Bid;

C. Bidder has not solicited or induced any individual or entity to refrain from bidding; and

D. Bidder has not engaged in corrupt, fraudulent, collusive, or coercive practices in competing for the Contract. For the purposes of this Paragraph 4.01.D:

1. "corrupt practice" means the offering, giving, receiving, or soliciting of anything of value likely to influence the action of a public official in the bidding process;

2. "fraudulent practice" means an intentional misrepresentation of facts made (a) to influence the bidding process to the detriment of Owner, (b) to establish bid prices at artificial non-competitive levels, or (c) to deprive Owner of the benefits of free and open competition;

3. "collusive practice" means a scheme or arrangement between two or more Bidders, with or without the knowledge of Owner, a purpose of which is to establish bid prices at artificial, non-competitive levels; and

4. "Coercive practice" means harming or threatening to harm, directly or indirectly, persons or their property to influence their participation in the bidding process or affect the execution of the Contract.

## ARTICLE 5 – BASIS OF BID

5.01 Bidder will complete the Work in accordance with the Contract Documents for the following price(s):

### BID SCHEDULE

**1340 South (South Frontage Road to 200 East)**

| Item No. | Description | Quantity | Units | Unit Price | Amount |
|---|---|---|---|---|---|
| 1 | 3" Overlay | 8016 | SY | 10.00 | 80 160.00 |
| 2 | 2" Mill | 8016 | SY | 1.42 | 11,382.72 |
| 3 | Manhole raised to grade | 15 | EA | 625.00 | 9,375.00 |
| 4 | Water valve raised to grade | 11 | EA | 450.00 | 4,950.00 |

Subtotal: 105,867.72

**110 W (1150 S to around loop)**

| Item No. | Description | Quantity | Units | Unit Price | Amount |
|---|---|---|---|---|---|
| 1 | Manhole raised to grade | 24 | EA | 405.00 | 9,720.00 |
| 2 | Water valve raised to grade | 17 | EA | 275.00 | 4,675.00 |
| 3 | 2" overlay | 4664 | SY | 6.90 | 32,181.60 |

Subtotal: 46,576.60

Cannon Drive and Cannon Cir (1150 S to 1340 S)

| Item No. | Description | Quantity | Units | Unit Price | Amount |
|---|---|---|---|---|---|
| 1 | Manhole raised to grade | 12 | EA | 405.00 | 4,860.00 |
| 2 | Water valve raised to grade | 10 | EA | 275.00 | 2,750.00 |
| 4 | 2" overlay | 5091 | SY | 6.90 | 35,127.90 |

Subtotal: 42,737.90

**450 E Lakeview Way (Spencer Way to the End)**

| Item No. | Description | Quantity | Units | Unit Price | Amount |
|---|---|---|---|---|---|
| 1 | Manhole raised to grade | 4 | EA | 405.00 | 1,620.00 |
| 2 | Water valve raised to grade | 3 | EA | 275.00 | 825.00 |
| 3 | 2" overlay | 1478 | SY | 6.90 | 10198.20 |

Subtotal: 12,643.20

1525 W (Clark Ln to Buffalo Ranch Trail)

| Item No. | Description | Quantity | Units | Unit Price | Amount |
|---|---|---|---|---|---|
| 1 | 2" overlay | 6977 | SY | 6.90 | 48,141.30 |
| 2 | Manhole raised to grade | 4 | EA | 405.00 | 1,620.00 |
| | Water valve raised to grade | 10 | EA | 275.00 | 2,750.00 |
| | | | | Subtotal: | |

Somerset Rd (Kensington to Ramsgate)

| Item No. | Description | Quantity | Units | Unit Price | Amount |
|---|---|---|---|---|---|
| 1 | 2" overlay | 1563 | SY | 6.90 | 10,784.70 |
| 3 | Manhole raised to grade | 3 | EA | 405.00 | 1,215.00 |
| 4 | Water valve raised to grade | 3 | EA | ~~275~~ 275.00 | 825.00 |
| | | | | Subtotal: | 12,824.70 |

1875 W (Burke Ln to 950 N)

| Item No. | Description | Quantity | Units | Unit Price | Amount |
|---|---|---|---|---|---|
| 1 | 2 " overlay | 6898 | SY | 6.90 | 47,596.20 |
| 2 | Manhole raised to grade | 20 | EA | 405.00 | 8,100.00 |
| 3 | Water valve raised to grade | 23 | EA | 275.00 | 6,325.00 |
| | | | | Subtotal: | 62,021.20 |

950 N (1875 W to 2050 W)

| Item No. | Description | Quantity | Units | Unit Price | Amount |
|---|---|---|---|---|---|
| 1 | 2" overlay | 2744 | SY | 6.90 | 18,933.60 |
| 2 | Manhole raised to grade | 1 | EA | 405.00 | 405.00 |
| 3 | Water valve raised to grade | 6 | EA | 275.00 | 1,650.00 |
| | | | | Subtotal: | 20,988.60 |

Station Parkway (N of McDonalds to Park Ln)

| Item No. | Description | Quantity | Units | Unit Price | Amount |
|---|---|---|---|---|---|
| 1 | Class A Chip Seal | 7763 | SY | 1.85 | 14,361.55 |
| | | | | Subtotal: | 14,361.55 |

Station Parkway (Park Ln to Train Station)

| Item No. | Description | Quantity | Units | Unit Price | Amount |
|---|---|---|---|---|---|
| 1 | Class A Chip Seal | 11143 | SY | 1.85 | 20,614.55 |
| | | | | Subtotal: | 20,614.55 |

Clark Ln ( Legacy Bridge to East end of Roundabout)

| Item No. | Description | Quantity | Units | Unit Price | Amount |
|---|---|---|---|---|---|
| 1 | Class A Chip Seal | 23952 | SY | 1.85 | 44,311.20 |
| 2 | Level Course | 50 | TON | 69.00 | 3,450.00 |
| | | | | Subtotal: | 47,761.20 |

**West State (Bridge to 200 W)**

| Item No. | Description | Quantity | Units | Unit Price | Amount |
|---|---|---|---|---|---|
| 1 | Class A Chip Seal | 6629 | SY | 1.85 | 12,263.05 |
| 2 | Level Course | 25 | TON | 69.00 | 1,725.00 |

Subtotal: 13,988.65

**2017 – 18 Level Course**

| Item No. | Location | Quantity | Units | Unit Price | Amount |
|---|---|---|---|---|---|
| 1 | 1525 W West of Buffalo Ranch Trail | 100 | TONS | 69.00 | 6,900.00 |
| 2 | 400 Tons Leveling Throughout The City | 400 | TONS | 69.00 | 27,600.00 |

Subtotal: 34,500.00

**2017 – 18 Proposed Crack Seal**

| Item No. | Description | Quantity | Units | Unit Price | Amount |
|---|---|---|---|---|---|
| 1 | 50 Tons Crack Seal Throughout The City | 50 | TONS | 1975.00 | 98,750.00 |

Subtotal: 98,750.00

Project Total: $586,147.17

For work listed above shown on the drawings, I/we agree to perform for the sum of the unit price amounts at:

Five hundred eighty six thousand one hundred forty seven dollars and seventeen cents DOLLARS ($ 586 147.17

(Words) (Numbers)

(In the case of discrepancy, written amount shall govern)

Unit Prices have been computed in accordance with Paragraph 11.03.B of the General Conditions.

Bidder acknowledges that estimated quantities are not guaranteed, and are solely for the purpose of comparison of Bids, and final payment for all unit price Bid items will be based on actual quantities, determined as provided in the Contract Documents.

**NOTES:**

- Quantities are for bid purposes only and are based on engineering estimates. Farmington City reserves the right to increase or decrease work by up to 100% at the unit price stated. Portions of the work may be deleted in their entirety to accommodate the budget.
- The contractor is responsible to verify all material quantities prior to placement.
- The raising of the manhole and valves to grade is to be done within two weeks of when asphalt overlays are completed.

- All Chip and Seal work is to be completed by August 30, 2017

## ARTICLE 6 – TIME OF COMPLETION

6.01 Bidder agrees that Chip and Seal work shall be completed by August 30, 2017 and all other Work will be substantially complete on or before September 30, 2017, and will be completed and ready for final payment in accordance with Paragraph 14.07 of the General Conditions on or before October 15, 2017. Bidder accepts the provisions of the Agreement as to liquidated damages.

## ARTICLE 7 – ATTACHMENTS TO THIS BID

7.01 The following documents are submitted with and made a condition of this Bid:

A. Required Bid security in the form of a certified check, or bank money order, issued by a surety meeting the requirements of Paragraphs 5.01 and 5.02 of the General Conditions;

B. Evidence of authority to do business in the state of the Project; or a written covenant to obtain such license within the time for acceptance of Bids;

## ARTICLE 8 – DEFINED TERMS

8.01 The terms used in this Bid with initial capital letters have the meanings stated in the Instructions to Bidders, the General Conditions, and the Supplementary Conditions.

## ARTICLE 9 – BID SUBMITTAL

9.01 This Bid is submitted by:

If Bidder is:

An Individual

Name (typed or printed): _____

By: _____
(Individual's signature)

Doing business as: _____

A Partnership

Partnership Name: _____

By: _____
(Signature of general partner -- attach evidence of authority to sign)

Name (typed or printed): _____

A Corporation

Corporation Name: Kilgore Contracting (SEAL)

State of Incorporation: Delaware

Type (General Business, Professional, Service, Limited Liability): LLC

By: _____
(Signature -- attach evidence of authority to sign)

Name (typed or printed): Jason Kilgore

Title: ~~COO~~ CEO

(CORPORATE SEAL)

Attest Ashleigh Griffith

Date of Qualification to do business in *Utah* is 7/1/10.

A Joint Venture

Name of Joint Venture: _____

First Joint Venturer Name: _____ (SEAL)

By: _____
(Signature of first joint venture partner -- attach evidence of authority to sign)

Name (typed or printed): _____

Title: _____

Second Joint Venturer Name: _____ (SEAL)

By: _____
(Signature of second joint venture partner -- attach evidence of authority to sign)

Name (typed or printed): _____

Title: _____

(Each joint venturer must sign. The manner of signing for each individual, partnership, and corporation that is a party to the joint venture should be in the manner indicated above.)

Bidder's Business Address 7057 West 2100 South
Salt Lake City Utah 84128

Phone No. 801-250-0132 Fax No. 801-250-0083

E-mail Joe.lindsey@Kilgore Contracting.com (if available)

SUBMITTED on May 18, 20 17.

State Contractor License No. 7741778-5501.

**END OF SECTION**

# CITY COUNCIL AGENDA

For Council Meeting:
June 6, 2017

**SUBJECT: Approval of Squires Construction for the 650 West Park Pickleball and Basketball Courts**

**ACTION TO BE CONSIDERED:**

Approve construction services and contract for the 650 West Park Pickleball and Basketball Courts to Squires Construction for the amount of $391,584.00.

**GENERAL INFORMATION:**

See enclosed staff report prepared by Chad Boshell, City Engineer.

NOTE: Appointments must be scheduled 14 days prior to Council Meetings; discussion items should be submitted 7 days prior to Council meeting.

# FARMINGTON CITY

H. JAMES TALBOT
MAYOR

BRETT ANDERSON
DOUG ANDERSON
JOHN BILTON
BRIGHAM MELLOR
CORY RITZ
CITY COUNCIL

DAVE MILLHEIM
CITY MANAGER

City Council Staff Report

To: Honorable Mayor and City Council

From: Chad Boshell, City Engineer

Date: June 6, 2017

SUBJECT: **APPROVE THE CONTRACTOR AND CONTRACT FOR THE 650 WEST PARK PICKLEBALL AND BASKETBALL COURTS**

## RECOMMENDATION

Approve construction services and contract for the 650 West Park Pickleball and Basketball Courts to Squires Construction for the amount of $391,584.00.

## BACKGROUND

The City received 3 bids for the 650 West Park Pickleball and Basketball Courts as shown below:

| Contractor | Total Bid |
|---|---|
| **Squires Construction** | **$391,584** |
| Tennis and Track | $402,658 |
| Park and Tennis Courts | $413,620 |

The project construction is planned to start in the middle of June and be done in September of 2017. City staff recommends awarding the 650 West Park Pickleball and Basketball Courts to Squires Construction.

## SUPPLEMENTAL INFORMATION

1. Contract

Respectively Submitted

Chad W. Boshell

Chad Boshell
City Engineer

Reviewed and Concur

Dave Millheim
City Manager

160 S MAIN · P.O. BOX 160 · FARMINGTON, UT 84025
PHONE (801) 451-2383 · FAX (801) 451-2747
www.farmington.utah.gov

# SECTION 00520

## STANDARD FORM OF AGREEMENT

THIS AGREEMENT is by and between Farmington City ("Owner") and Squires Construction ("Contractor").

Owner and Contractor hereby agree as follows:

## ARTICLE 1 – WORK

1.01 Contractor shall complete all Work as specified or indicated in the Contract Documents. The Work is generally described as follows:

Farmington Post Tension Pickleball & Basketball Courts

## ARTICLE 2 – THE PROJECT

2.01 The Project for which the Work under the Contract Documents may be the whole or only a part is generally described as follows:

The project consists of installation of MUSCO lighting system, pickleball courts, basketball courts, and fencing.

## ARTICLE 3 – ENGINEER

3.01 The Project has been designed by Farmington City (Engineer), which is to act as Owner's representative, assume all duties and responsibilities, and have the rights and authority assigned to Engineer in the Contract Documents in connection with the completion of the Work in accordance with the Contract Documents.

## ARTICLE 4 – CONTRACT TIMES

4.01 *Time of the Essence*

A. All time limits for Milestones, if any, Substantial Completion, and completion and readiness for final payment as stated in the Contract Documents are of the essence of the Contract.

4.02 *Dates for Substantial Completion and Final Payment*

A. All the work will be completed within 90 calendar days after issuance of the notice to proceed.

4.02 *Liquidated Damages*

A. Contractor and Owner recognize that time is of the essence as stated in Paragraph 4.01 above and that Owner will suffer financial loss if the Work is not completed within the times specified in Paragraph 4.02 above, plus any extensions thereof allowed in accordance with Article 12 of the General Conditions. The parties also recognize the delays, expense, and difficulties involved in proving in a legal or arbitration proceeding the actual loss suffered by Owner if the Work is not completed on time. Accordingly, instead of requiring any such proof, Owner and Contractor agree that as liquidated damages for delay (but not as a penalty), Contractor shall pay Owner $200.00 for each day that expires after the time specified in Paragraph 4.02 above for Substantial Completion until the Work is substantially complete. After Substantial Completion, if Contractor shall neglect, refuse, or fail to complete the remaining Work within the Contract Time or any proper extension thereof granted by Owner, Contractor shall pay Owner $ 500.00 for each day that expires after the time specified in Paragraph 4.02 above for completion and readiness for final payment until the Work is completed and ready for final payment.

## ARTICLE 5 – CONTRACT PRICE

5.01 Owner shall pay Contractor for completion of the Work in accordance with the Contract Documents an amount in current funds equal to the sum of the amounts determined pursuant to Paragraph 5.01.A below:

A. For all Work, at the prices stated in Contractor's Bid and shown here:

Three hundred ninety one thousand five hundred eighty four DOLLARS ($ 391,584.00 )
(Words) (Numbers)
(In the case of discrepancy, written amount shall govern)

## ARTICLE 6 – PAYMENT PROCEDURES

6.01 *Submittal and Processing of Payments*

A. Contractor shall submit Applications for Payment in accordance with Article 14 of the General Conditions. Applications for Payment will be processed by Engineer as provided in the General Conditions.

6.02 *Progress Payments; Retainage*

A. Owner shall make progress payments on account of the Contract Price on the basis of Contractor's Applications for Payment on or about the 1st day of each month during performance of the Work as provided in Paragraph 6.02.A.1 below. All such payments will be measured by the schedule of values established as provided in Paragraph 2.07.A of the General Conditions (and in the case of Unit Price Work

based on the number of units completed) or, in the event there is no schedule of values, as provided in the General Requirements.

1. Prior to Substantial Completion, progress payments will be made in an amount equal to the percentage indicated below but, in each case, less the aggregate of payments previously made and less such amounts as Engineer may determine or Owner may withhold, including but not limited to liquidated damages, in accordance with Paragraph 14.02 of the General Conditions.

   a. 95 percent of Work completed (with the balance being retainage); and

   b. 95 percent of cost of materials and equipment not incorporated in the Work (with the balance being retainage).

B. Upon Substantial Completion, Owner shall pay an amount sufficient to increase total payments to Contractor to 100 percent of the Work completed, less such amounts as Engineer shall determine in accordance with Paragraph 14.02.B.5 of the General Conditions and less 200 percent of Engineer's estimate of the value of Work to be completed or corrected as shown on the tentative list of items to be completed or corrected attached to the certificate of Substantial Completion.

6.03 *Final Payment*

A. Upon final completion and acceptance of the Work in accordance with Paragraph 14.07 of the General Conditions, Owner shall pay the remainder of the Contract Price as recommended by Engineer as provided in said Paragraph 14.07.

## ARTICLE 7 – INTEREST

7.01 All moneys not paid when due as provided in Article 14 of the General Conditions shall bear interest at the rate allowed by the State.

## ARTICLE 8 – CONTRACTOR'S REPRESENTATIONS

8.01 In order to induce Owner to enter into this Agreement, Contractor makes the following representations:

A. Contractor has examined and carefully studied the Contract Documents and the other related data identified in the Bidding Documents.

B. Contractor has visited the Site and become familiar with and is satisfied as to the general, local, and Site conditions that may affect cost, progress, and performance of the Work.

C. Contractor is familiar with and is satisfied as to all federal, state, and local Laws and Regulations that may affect cost, progress, and performance of the Work.

D. Contractor has carefully studied all: (1) reports of explorations and tests of subsurface conditions at or contiguous to the Site and all drawings of physical conditions relating to existing surface or subsurface structures at the Site (except Underground Facilities), if any, that have been identified in Paragraph SC-4.02 of the Supplementary Conditions as containing reliable "technical data," and (2) reports and drawings of Hazardous Environmental Conditions, if any, at the Site that have been identified in Paragraph SC-4.06 of the Supplementary Conditions as containing reliable "technical data."

E. Contractor has considered the information known to Contractor; information commonly known to contractors doing business in the locality of the Site; information and observations obtained from visits to the Site; the Contract Documents; and the Site-related reports and drawings identified in the Contract Documents, with respect to the effect of such information, observations, and documents on (1) the cost, progress, and performance of the Work; (2) the means, methods, techniques, sequences, and procedures of construction to be employed by Contractor, including any specific means, methods, techniques, sequences, and procedures of construction expressly required by the Contract Documents; and (3) Contractor's safety precautions and programs.

F. Based on the information and observations referred to in Paragraph 8.01.E above, Contractor does not consider that further examinations, investigations, explorations, tests, studies, or data are necessary for the performance of the Work at the Contract Price, within the Contract Times, and in accordance with the other terms and conditions of the Contract Documents.

G. Contractor is aware of the general nature of work to be performed by Owner and others at the Site that relates to the Work as indicated in the Contract Documents.

H. Contractor has given Engineer written notice of all conflicts, errors, ambiguities, or discrepancies that Contractor has discovered in the Contract Documents, and the written resolution thereof by Engineer is acceptable to Contractor.

I. The Contract Documents are generally sufficient to indicate and convey understanding of all terms and conditions for performance and furnishing of the Work.

## ARTICLE 9 – CONTRACT DOCUMENTS

9.01 *Contents*

A. The Contract Documents consist of the following:

1. This Agreement (Pages 1 through 7, inclusive)

2. Performance bond (Pages 1 through 3, inclusive)

3. Payment bond (Pages 1 through 3, inclusive)

4. General Conditions (Pages 1 through 62, inclusive)

5. Supplementary Conditions (Pages 1 through 15, inclusive)

6. Specifications as listed in the table of contents of the Project Manual.

7. Drawings consisting of 5 sheets with each sheet bearing the following general title: "Farmington Post Tension Pickleball & Basketball Courts"

8. Addendum _____.

9. Exhibits to this Agreement (enumerated as follows):

   a. Contractor's Bid

10. The following which may be delivered or issued on or after the Effective Date of the Agreement and are not attached hereto:

    a. Notice to Proceed

    b. Work Change Directives

    c. Change Orders

    d. Schedule of Values

B. The documents listed in Paragraph 9.01.A are attached to this Agreement (except as expressly noted otherwise above).

C. There are no Contract Documents other than those listed above in this Article 9.

D. The Contract Documents may only be amended, modified, or supplemented as provided in Paragraph 3.04 of the General Conditions.

## ARTICLE 10 – MISCELLANEOUS

10.01 *Terms*

A. Terms used in this Agreement will have the meanings stated in the General Conditions and the Supplementary Conditions.

10.02 *Assignment of Contract*

A. No assignment by a party hereto of any rights under or interests in the Contract will be binding on another party hereto without the written consent of the party sought to be bound; and, specifically but without limitation, moneys that may become due and

moneys that are due may not be assigned without such consent (except to the extent that the effect of this restriction may be limited by law), and unless specifically stated to the contrary in any written consent to an assignment, no assignment will release or discharge the assignor from any duty or responsibility under the Contract Documents.

10.03 *Successors and Assigns*

A. Owner and Contractor each binds itself, its partners, successors, assigns, and legal representatives to the other party hereto, its partners, successors, assigns, and legal representatives in respect to all covenants, agreements, and obligations contained in the Contract Documents.

10.04 *Severability*

A. Any provision or part of the Contract Documents held to be void or unenforceable under any Law or Regulation shall be deemed stricken, and all remaining provisions shall continue to be valid and binding upon Owner and Contractor, who agree that the Contract Documents shall be reformed to replace such stricken provision or part thereof with a valid and enforceable provision that comes as close as possible to expressing the intention of the stricken provision.

10.05 *Contractor's Certifications*

A. Contractor certifies that it has not engaged in corrupt, fraudulent, collusive, or coercive practices in competing for or in executing the Contract. For the purposes of this Paragraph 10.05:

1. "corrupt practice" means the offering, giving, receiving, or soliciting of anything of value likely to influence the action of a public official in the bidding process or in the Contract execution;

2. "fraudulent practice" means an intentional misrepresentation of facts made (a) to influence the bidding process or the execution of the Contract to the detriment of Owner, (b) to establish Bid or Contract prices at artificial non-competitive levels, or (c) to deprive Owner of the benefits of free and open competition;

3. "collusive practice" means a scheme or arrangement between two or more Bidders, with or without the knowledge of Owner, a purpose of which is to establish Bid prices at artificial, non-competitive levels; and

4. "coercive practice" means harming or threatening to harm, directly or indirectly, persons or their property to influence their participation in the bidding process or affect the execution of the Contract.

IN WITNESS WHEREOF, Owner and Contractor have signed this Agreement. Counterparts have been delivered to Owner and Contractor. All portions of the Contract Documents have been signed or have been identified by Owner and Contractor or on their behalf.

This Agreement will be effective on _____ (which is the Effective Date of the Agreement).

OWNER:

Farmington City

By: _____

Title: _____

Attest _____

Title: _____

Address for giving notices:

Farmington City

PO Box 160

Farmington, Utah 84025

(If Owner is a corporation, attach evidence of authority to sign. If Owner is a public body, attach evidence of authority to sign and resolution or other documents authorizing execution of this Agreement.)

CONTRACTOR

_____

By: _____

Title: _____

(If Contractor is a corporation, a partnership, or a joint venture, attach evidence of authority to sign.)

Attest: _____

Title: _____

Address for giving notices:

_____

_____

_____

License No.: _____
(Where applicable)

Agent for service of process:

_____

**END OF SECTION**

# CITY COUNCIL AGENDA

For Council Meeting:
June 6, 2017

**SUBJECT: Minute Motion Approving Summary Action List**

1. Approval of Minutes from May 16, 2017
2. Resolution for Pick-Up Contribution for Firefighters on State Retirement
3. Davis County Dispatch Agreement
4. 700 South Street Cross-Section Modification
5. Arhaus LLC Shaved Ice Rights-of –Way License Agreement
6. Local First Utah's Independents Week Proclamation
7. Bronson Andreasen Fee Waiver Request
8. Lease Agreement for House located at 190 South Main Street

NOTE: Appointments must be scheduled 14 days prior to Council Meetings; discussion items should be submitted 7 days prior to Council meeting.

# FARMINGTON CITY COUNCIL MEETING

May 16, 2017

## WORK SESSION

*Present: Mayor Jim Talbot; Council members John Bilton, Doug Anderson, Brett Anderson, Brigham Mellor; City Manager Dave Millheim; City Planner Eric Anderson, City Development Director David Petersen, Parks and Recreation staff Neil Miller, Sylvia Clark, Dailee Gardner, Bryan White; Police Chief Wayne Hansen, Lieutenant Parish Snyder; Building Official Eric Miller; City Recorder Holly Gadd and Recording Secretary Tarra McFadden.*

*Excused: Cory Ritz*

### Parks and Recreation Update

Staff from Parks and Recreation (**Sylvia Clark**, **Dailee Gardner** and **Bryan White**) provided an update regarding the various programs and facilities that serve Farmington residents. They also noted the special events such as the Easter Egg Hunt that the department facilitates with support from the Youth City Council and Miss Farmington royalty. Overall, recreation numbers are up for 2017. Basketball participation has grown since the Gymnasium began operating. Adult volleyball has also increased. Tackle football participation has begun to taper off related to concussion concerns, but Parks and Recreation Staff added Flag Football as an alternative. Baseball and Softball were added in the spring of 2016 and have continued this year. Staff noted that it is sometimes difficult to find coaches and teenage staff to help manage the recreation programs.

### Building Safety Month and Review of Department

Building Official **Eric Miller** asked that the Mayor declare the Month of May Building Safety Month as recognized by the International Code Council. Building Safety Month is a public awareness campaign to help individuals, families and business understand what it take to create safe and sustainable structures. **Eric Miller** provided a legislative update summarizing the following bills: House Bill 281 which would repeal, for some municipalities in the state, provisions related to building safety. The City will not be allowed to have stricter building codes than the State. House Bill 37 eliminates the requirement of foundation drains if the soils report supports such action, and would eliminate the need for arc-fault circuit interrupter protection in bedrooms, family rooms and kitchens. It also impacts the installation of passive radon controls. Senate Bill 241 standardizes plan review times across the state. Residential plan reviews must be completed in 14 days, and apartment buildings /townhouses within 21 days. This will impact work load for City staff.

### Recent Trends in the Police Department

Chief **Wayne Hansen** provided an update regarding police activities. As Station Park has gotten busier, public safety calls have increased and Police respond regarding locked keys, fraud,

shoplifting and minor traffic accidents. Responding to incidents at Park Lane Village has increased. **Wayne Hansen** noted that Station Park and Park Lane Village management and security have been very good to work with. He described a felony stop that occurred in late April as officers arrested a homicide suspect. Farmington police are handling suicidal incidents on a weekly basis. Officers have successfully negotiated with distressed persons before medical responders can attend and transport the person to the hospital for additional support and evaluation. Officers respond to deaths, sometimes related to overdoses. Cabela's was experiencing theft of very expensive equipment. In response, Farmington Police have conducted walkthroughs with uniformed officers and often spend down time in the parking lot completing paperwork. Shoplifting reports have since decreased.

## REGULAR SESSION

*Present: Mayor Jim Talbot; Council members John Bilton, Doug Anderson, Brett Anderson, Brigham Mellor; City Manager Dave Millheim; City Planner Eric Anderson, City Development Director David Petersen; Police Chief Wayne Hansen, Lieutenant Parish Snyder; Building Official Eric Miller; City Recorder Holly Gadd and Recording Secretary Tarra McFadden.*

*Excused: Cory Ritz*

## CALL TO ORDER:

Mayor **Jim Talbot** called the meeting to order at 7:05 p.m.

### Roll Call (Opening Comments/Invocation/Pledge of Allegiance)

The invocation was offered by **Councilmember Brett Anderson** and the Pledge of Allegiance was led by **William Manwaring** of Boy Scout Troop 300.

## PRESENTATION:

Mayor **Jim Talbot** declared May as Building Safety Month as observed by International Code Council.

## PUBLIC HEARING:

### General Plan Amendment Adopting the North Station Small Area Master Plan

**David Petersen** provided some background information about the 220+ acres of property north of Shepard Creek, west of the UP tracks, east of the D&RG trail, and south of Shepard Lane. Staff have received many inquiries about keeping the area as open space. The 1994 General Land Use plan zoned the area as small commercial. This was not a sustainable plan. North of Shepard Creek has been zoned OMU since 2007 and as property owners have rights, the City cannot downzone to open space. Property owners have a right to develop, and this action to approve a Small Area Master Plan will guide development consistent with the idea of Farmington as a

unique gathering place. The Planning Charrette conducted by UDA involved 19 property owners to produce a conceptual master plan. The plan is to allow for mixed use that would include office space, commercial ventures and residential areas. The plan promotes a stable daytime population to maintain surrounding retail. **David Petersen** recommended that the Council adopt the Small Area Master Plan as an element of general land use plan to help guide development.

***Mayor Jim Talbot opened the Public Hearing at 7:33 pm.***

**Corey Price**, 864 North McKittrick Lane, expressed concern that stakeholders (large property owners) were invited to participate in the planning exercise, but not neighboring residents. He noted that the letter mentions a buffer by placing lower intensity development to the west, but he does not see an area as described in the plans. **Corey Price** provided information about landslide characteristics of Davis County as compiled by UGS. As a structural engineer, he is concerned about liquefaction induced landslides that would cause the area in question to re-liquefy in aftershocks and possible float utilities to the surface.

**Bryce Crowley**, 1743 West Spring Meadow Lane, asked that the Council vote against adopting the Small Area Master Plan as part of general master plan. He noted that he moved his chiropractic clinic from Centerville because of traffic congestion related to Walmart and the movie theater. He expressed concern about drainage around the property in question and the plan to manage water in the area. He reaffirmed his desire for the space to remain open as it is a unique characteristic of Farmington that he relocated to live close to.

**Annette Crowley**, 1743 West Spring Meadow Lane, agreed with previous citizen comments. She appreciates that trails in Farmington and is concerned about trail crossings, noting that Clark Lane is difficult for cyclists to cross. She stated that she supports less than more relative to building and its impact on the environment. She works downtown, but lives in Farmington to be near open space. **Annette Crowley** asked that the Council be good stewards and not fill every area with development. She also noted that she did not see height restrictions for buildings and is concerned about the loss of views.

**Ken Stuart**, 1305 North 1700 W, Woods Cross, identified himself as a general contractor developing 90 acres with Chartwell. He wanted to address the concern of residential being the low-hanging fruit, noting that in the development design residential areas will be the buffer for the office space. There are areas of the property that are not conducive to office space or retail because of poor visibility from the freeway and poor access. With demonstrable demand, housing will be the most profitable use for these areas. He supports the idea of mixed commercial use as part of the development.

**Stanton Davis**, 862 West 500 South, shared that he loves Farmington and argued that the Council is facing a problem like New York City did in the 1850s. New York City had 800 acres that they committed as Central Park rather than capitalizing on in demand real estate. This has allowed New York to maintain the space as a resource for residents. Similarly, he hopes that Council will keep residents in mind when making development decisions. He noted that Farmington is playing catch up with infrastructure due to population growth and does not want to see the city become overdeveloped as it would negatively impact current residents.

***Mayor Jim Talbot closed the Public Hearing at 7:53 pm.*** He asked the Council to provide any comments or questions before proceeding with any motions.

Councilmember **John Bilton** credited the city for working with developers and planners to hold public meetings and work with property owners to shape development of the area. He noted that the City worked to move the WDC from aligning with the D&RG trail to west of the City. He noted that the Shepard Lane interchange alignment is unknown and will impact development. He supports the Small Area Master Plan and the consideration to put more density along I-15 and away from existing residential.

Councilmember **Doug Anderson** shared support for open space, but noted that the Small Area Master Plan is the culmination of many years of work with a lot of stakeholder collaboration. He said that by continuing to work together on a traffic plan and other details, he has faith that the process will deliver a result as good as the picture. This will keep the current "feel" of Farmington with trails and gathering places.

Councilmember **Brett Anderson** stated that the Council's action is a good way to impact property that is already zoned. The City can communicate a vision of what it wants. Looking at the City budget and population growth, commercial development is needed to keep the City stable.

Councilmember **Brigham Mellor** noted that storm water mitigation will be considered as development occurs. He noted that the city is committed to building safe buildings and continuing to engage in planning exercises to mitigate traffic, water and utility issues. He argued that the Central Park example is not applicable to Farmington, because the land in question is owned by private property holders, not the City. As long as office space and residential development occurs in balance with use and market demand, he supports adoption of the Small Area Master Plan.

Mayor **Jim Talbot** appreciated citizen comments, and described the unique position Farmington has been in with rapid growth. In 2006, Station Park seemed like a crazy idea, but it is flourishing and being enjoyed by residents and non-residents alike. Cities are required to make tough decisions that balance growth with the desires of current residents.

City Planner **Eric Anderson** noted that the Planning Commission recommended the removal of Exhibit A from approval as it includes a page specifying uses which is more appropriate for a Zoning Ordinance approval.

***Motion:***

**John Bilton** moved to amend the General Plan adopting the North Station Small Area Master Plan as described in the staff report as an element of its General Plan, subject to all applicable Farmington City ordinances and with the exclusion of Exhibit A. **Brigham Mellor** seconded the motion which was approved unanimously.

Findings for Approval

1. The proposed North Station Small Area Master Plan was completed through a design charrette involving unanimous stakeholder consensus.
2. The stakeholders included the majority of property owners within the project area, neighboring property owners to the project area, the City, the County, and Chartwell Capital.
3. The Planning Commission has held a public hearing on multiple recommendations from the North Station Small Area Master Plan, including removing the large footprint building provision, and amending the regulating plan and related block size, and the City Council approved the requested modifications to Chapter 18 of the Zoning Ordinance.
4. The proposed North Station Small Area Master Plan is consistent with the stated intent and purpose of the Farmington City General Plan and Zoning Ordinance for this district; including a fine grained mix of uses such as office, retail, and residential, an emphasis on bringing activity to the street and enhancing walkability, placing parking to the rear of buildings, creating public spaces and nodes, enhancing open space and connectivity, providing a live/work/play environment, and providing a diverse employment base for the City and County.
5. The proposed North Station Small Area Master Plan has a good balance of residential and retail that will support the primary office use, which is the overarching intent of the OMU zone.
6. The North Station Small Area Master Plan proposes a nuanced continuum of development intensity with lower intensity development to the west, higher intensity development in the middle and along major roads, and commercial along the freeway and arterial roads, such as Shepard Lane, Burke Lane, and 1100 West. The continuum of development intensity provides a buffer between existing residential neighborhoods to the west, and places the highest intensity development near the future Shepard Lane interchange and 1-15 to the east.
7. The fine-grained mixture of uses proposed in the North Station Small Area Master Plan creates an office park that is unique to the State of Utah and will create a vibrant employment base for Davis County that fosters a live/work/play environment.
8. The proposed North Station Small Area Master Plan will help to diversify and balance the City's tax structure through expanding its commercial property tax base, instead of relying too heavily on residential property and commercial sales tax.
9. The proposed North Station Small Area Master Plan does not grant vesting to any property owners within the project area; rather, it is a guiding document that will inform the development of the mixed-use employment district into the future.

**Miscellaneous Zoning Ordinance Amendments**

**Eric Anderson** outlined a number of proposed amendments to current zoning ordinances. These require updates to redefine secondary dwelling units, maintain compliance with Fair Housing laws and Americans with Disabilities Act, allow for financial institutions to have drive-up windows, designate the storm water official as the flood plain administrator, allow for

parking reductions to be approved by the Planning Commission, amend the Regulating Plan to conform to the recommendations of the UDA charrette, and increase the block sizes as found in Section 11-18-040 of the Zoning Ordinance.

***Mayor Jim Talbot opened the public hearing at 9:01 p.m.; with no one signed up to address the Council on the issue, he immediately closed the public hearing.***

Public hearing at 9:01pm, close public hearing

**John Bilton** thanked the staff for their work in cleaning up elements of the code.

***Motion:***

**John Bilton** moved to approve the amendments to the zoning ordinance as set forth in the May 16, 2017 staff report and the enclosed enabling ordinance related thereto including Findings a-i, with the exception in the background section C should read "drive up window/drop off lane allowed only with special exception review by the planning commission as set forth in Section 11-3-045 of this title, as to use only and not fixed dimensional standards". **Doug Anderson** provided a second to the motion which was approved unanimously.

Findings for Approval:

a. The intent of the secondary dwelling unit was to be similar to that of the accessory dwelling unit, which requires that the owner live on-site; this text amendment is bringing the ordinance into consistency with its original intent. The zone text amendment will also ensure that single family residential zones do not become proliferated with absentee apartment owners.
b. Moving residential facilities for the disabled from a conditional use to a permitted use, in all zones where single family residential are permitted uses, will bring the Zoning Ordinance into compliance with federal law, specifically the Fair Housing and American with Disabilities Acts.
c. Financial institutions are a desirable use in the mixed-use district, as they provide a necessary service, and are low-impact. In order to meet the needs of their clientele, financial institutions require drive-thru windows to function.
   Amending the use table in Chapter 18 allows for this type of use to realistically thrive in the mixed-use district. Additionally, moving the drive-thru windows for financial institutions to special exceptions instead of special use review provides a clear, established, and well-defined mechanism for Planning Commission review. Through the special exception review process, the City still has a degree of oversight in deciding where drive-thru windows are compatible with the intent of the mixed use district and where they are not.
d. Currently the mixed use zones are not defined under the wireless facility use table; staff has always interpreted these zones as falling under the C zone designation. This zone text amendment explicitly designates the mixed use zones independently of the C zone, and is context sensitive to the intent of the mixed use zones.

e. Secondary dwelling units are currently relegated to the OTR zone and the vesting granted through the conditional use permit are limited to the current property owner; this amendment updates the ordinance bringing it into conformity with the rest of Title 11 where secondary dwelling units are allowed as conditional uses.
f. The storm water official already does the majority of the work of the flood plain official; this amendment is codifying an already existing duty, and streamlining the flood plain approval process.
g. Having to go through a variance approval process by the Board of Adjustments for a parking reduction as currently constituted by Chapter 32 is onerous, particularly when the request is not a variance. Decisions about reductions of parking requirement should be made by the Planning Commission on a case-by- case basis when reviewing a site plan and/or conditional use permit application.
h. Amending the Regulating Plan and related block size prior to Project Master Plan gives the applicant confidence in their PMP moving forward without granting full approval and vesting to the project. The regulating plan and related block size amendments are consistent with Chartwell Capital's PMP application, which is currently under review by the City.
i. The Regulating Plan and related block size amendments are consistent with the intent of the OMU zone, and will allow for more efficient use of the interior of the blocks and will allow future redevelopment as economic and market pressures put demands on properties for in-fill development. Independent of Chartwell's PMP, staff would be recommending the zone text amendments as they are consistent with the intent of the OMU zone and are highly desirable because of the increase in efficient usage of the land and increased walkability for the district as a whole.

**SUMMARY ACTION:**

1. Approval of Minutes from May 2, 2017
2. Plat Amendment for Villa Susanna PUD Subdivision
3. Vote Centers for Upcoming Election

***Motion:***

**Brett Anderson** moved, with a second from **Doug Anderson** to approve summary action items 1-3 as contained in the staff report.

The motion was approved unanimously.

**OLD BUSINESS:**

**Eagle Cove Transfer of Development Rights Valuation for property located on the NW Corner of Clovers Lane and 1100 West**

**Dave Millheim** referred Councilmembers to the staff report and noted that every TDR is uniquely situated to its own formula. The developer has provided multiple bids and project cost

information which was used to determine the valuation recommendation and the developer is prepared to pay immediately after Council approval.

***Motion:***

**Brigham Mellor** moved, with a second from **Doug Anderson**, to approve the valuation and sale of thirteen (13) City Transfer of Development Rights (TDR's) to the Eagle Cove subdivision located on the NW corner of Glovers Lane and 1100 West in the amount of $235,000. Payment to be received by the City within 30 days or said approval will be considered void.

The motion was approved unanimously.

**Water Tank Property Approval with Jerry Preston**

**Dave Millheim** reviewed information regarding the purchase of additional property complete the water tank and have it remain off of BLM and Forest Service property.

***Motion:***

**Brett Anderson** moved to approve the additional property for the water tank under option number 2 with a land acquisition price as demonstrated in the staff report of $16,198.35 payable to Elite Craft Homes.

**Doug Anderson** seconded the motion which was approved unanimously.

**GOVERNING BODY REPORTS:**

**City Manager Report**

**Dave Millheim** noted that the Police and Fire activity report is included in the staff report.

The engineering firm working with Symphony Homes made a mistake with the location of a road in Pheasant Hollow. Staff have met with the engineer and Symphony Homes and determined the value of lots and related square footage and agreed to remediation in the amount of $15,000. The engineering firm will pay the City to accommodate the mistake. Staff will bring the recommendation forward for approval in a future Council meeting.

The County approved a Car Show at Legacy Event Center without addressing the concerns expressed by Farmington City. The Mayor asked Holly Gadd to set up a meeting with him, **Dave Millheim**, Chief Hansen, **Doug Anderson** and **Brett Anderson** to respond to concerns related to the event.

**Dave Millheim** shared that County Commission has prepared an RFP for consultant services to analyze how Public Safety services are being delivered in Davis County. The County Commission want to look at how cities are doing it. The City is concerned about whether this is an honest attempt to qualify costs or merely shift costs to the City.

## Mayor Talbot & City Council Reports

### Councilmember Doug Anderson

**Doug Anderson** stated that he had questions from residents who have shared concern about the overgrowth of Station Park and the loss of Sports Authority, Gordman's, and The Gym.

Mayor **Jim Talbot** clarified that the loss of Sports Authority and Gordman's were not location specific, but related to bankruptcy action on the part of the national chain. Leases are in the works for the Sports Authority space and Pluralsight is buying The Gym as a benefit to its employees.

### Councilmember Brett Anderson

No updates to report.

### Councilmember Brigham Mellor

No updates to report.

### Councilmember John Bilton

**John Bilton** asked for an update on the Allie Rose home. **Dave Millheim** noted that legal descriptions are to be completed by UDOT by Wednesday, May 17.

### Mayor Jim Talbot

No updates to report.

## ADJOURNMENT

***Motion:***

At 9:35 p.m., **John Bilton** moved to adjourn the meeting.

_____

Holly Gadd, City Recorder

DRAFT

# FARMINGTON CITY

H. JAMES TALBOT
*MAYOR*

BRETT ANDERSON
DOUG ANDERSON
JOHN BILTON
BRIGHAM N. MELLOR
CORY R. RITZ
*CITY COUNCIL*

DAVE MILLHEIM
*CITY MANAGER*

City Council Staff Report

To: Mayor and City Council

From: Holly Gadd

Date: May 26, 2017

SUBJECT: **PICK-UP CONTRIBUTION FOR FIREFIGHTERS ON STATE RETIREMENT**

## RECOMMENDATION

Approve the enclosed resolution to pick-up the state retirement portion for firefighters.

## BACKGROUND

Each year the City has to pass a resolution stating that we will pick-up a part of the state retirement for firefighters. The City will have 4 firefighters on this plan. The percentage rate that the City will pick up for this next year is 15.05%.

Respectfully Submitted

Holly Gadd
City Recorder

Review & Concur

Dave Millheim
City Manager

160 S MAIN • P.O. BOX 160 • FARMINGTON, UT 84025
PHONE (801) 451-2383 • FAX (801) 451-2747
www.farmington.utah.gov

# RESOLUTION NO. 2017-____

**A RESOLUTION PROVIDING FOR THE "PICK-UP" OF REQUIRED MEMBER CONTRIBUTIONS FOR ALL ELIGIBLE EMPLOYEES REQUIRED TO CONTRIBUTE TO THE UTAH STATE RETIREMENT SYSTEMS BY FARMINGTON CITY, UTAH**

**WHEREAS,** the Utah Retirement Systems are established by State statutes and are intended to provide a meaningful retirement benefit to employees who have chosen a career in public service; and

**WHEREAS,** the Utah Retirement Systems operates governmental tax-qualified defined benefit plans described in Section 401(a) of the Internal Revenue Code of 1986; and

**WHEREAS,** in Revenue Ruling 2006-43, the IRS clarified its rules governing member contributions paid by employers ("pick-up") to require formal action by the employer to effect its "pick-up" election; and

**WHEREAS,** Farmington City is a participating member of the Utah Retirement Systems and elects to "pick-up" member contributions paid to the Utah Retirement Systems on behalf of all its eligible employees.

**NOW, THEREFORE, BE IT RESOLVED BY THE CITY COUNCIL OF FARMINGTON CITY, STATE OF UTAH, AS FOLLOWS:**

**Section 1. Election Pick up.** Farmington City hereby formally agrees to pick up 100% of the required member contribution for all eligible Farmington City employees required to contribute to the Utah Retirement Systems Contributory Retirement Plan for periods on or after July 1, 2017.

**Section 2. Severability.** If any section, part, or provision of this Resolution is held invalid or unenforceable, such invalidity or unenforceability shall not affect any other portion of this Resolution, and all sections, parts, and provisions of this Resolution shall be severable.

**Section 3. Effective Date.** This Resolution shall become effective immediately upon its passage.

**PASSED AND ADOPTED BY THE CITY COUNCIL OF FARMINGTON CITY, STATE OF UTAH, THIS 6TH DAY OF JUNE, 2017.**

**FARMINGTON CITY**

**ATTEST:**

_____ By:_____

Holly Gadd
City Recorder

H. James Talbot
Mayor

# FARMINGTON POLICE DEPARTMENT

*Chief Wayne D. Hansen*

City Council Staff Report

To: Honorable Mayor and City Council

From: Wayne Hansen, Police Chief

Date: May 30, 2017

**SUBJECT: Davis County Dispatch agreement**

**RECOMMENDATIONS**
Sign Interlocal agreement with Davis County for dispatch services.

**BACKGROUND**

The Davis County Sheriff's Department has sent us an interlocal agreement for dispatch services for the fiscal year 2017-2018. I have reviewed this agreement and find nothing that would keep us from signing. I also spoke to Dee Bird who is the dispatch center director and discussed the agreement with him. Based on that conversation our service costs will be formulated the same way that they have been in the past and will continue to be based on a fixed rate of $2219.00 per year for each police officer that we employ and $28.84 for each fire call. Based on the above I recommend that we sign the agreement.

Respectfully Submitted
Wayne Hansen
Wayne Hansen
Police Chief

Review and Concur
Dave Millheim
Dave Millheim
City Manager

286 South 200 East • PO Box 160 • Farmington, Utah 84025
Telephone 801-451-5453 • Fax 801-451-0839

# Davis County Sheriff's Office
# Communications Division

Dee Bird
Center Manager

Amanda Glezos
Assistant Center Manager

Lance Jacobs
Supervisor

March 27, 2017

Farmington City
ATTN: Dave Millheim- City Manager
160 South Main Street
Farmington, UT 84025

**SUBJECT: 2017-2018 INTERLOCAL COOPERATION AGREEMENT FOR DISPATCH SERVICES**

Mr. Millheim:

Starting fiscal year 2017-2018, Davis County has put together an Interlocal Cooperation Agreement for Communication Services with Davis County, and the agencies we service. This document has been in the works for the past year with the legal assistance from Davis County Attorney Michael Kendall to meet the legal standards of this document.

Enclosed, please find the Davis County's 2017-2018 Interlocal Cooperation Agreement for Dispatch Services. If this Agreement is acceptable after you and your city have reviewed it. Please sign and return both original signature pages to the Davis County Sheriff's Office, Attn: Dee Bird.

If you have questions pertaining to this agreement, please don't hesitate to contact Davis County Attorney Michael Kendall (801) 451-3574 or myself (801) 451-4157.

Sincerely,

Dee Bird

Enclosed: 2017-2018 Interlocal Cooperation Agreement
Extra Original Signature Page

800 West State Street
P.O. Box 618
Farmington, UT 84025
(801) 451-4157
dbird@co.davis.ut.us

# INTERLOCAL COOPERATION AGREEMENT

This Interlocal Cooperation Agreement (this "Agreement") is made and entered into by and between Davis County, a political subdivision of the state of Utah (the "County"), and Farmington City, a municipal corporation of the state of Utah (the "City"). The County and the City may be collectively referred to as the "Parties" herein or may be solely referred to as a "Party" herein.

**Recitals**

A. WHEREAS, the Parties, pursuant to the Utah Interlocal Cooperation Act, which is codified at Title 11, Chapter 13, Utah Code Annotated (the "Act"), are authorized to enter into in this Agreement;

B. WHEREAS, the County, through the 9-1-1 communications center (the "Center") operated by the Davis County Sheriff's Office ("DCSO"), provides dispatch services within the limits of Davis County;

C. WHEREAS, the City desires to benefit from the services of the County, DCSO, and the Center as specified in this Agreement; and

D. WHEREAS, the County desires to permit the City to benefit from the services of the County, DCSO, and the Center as specified in this Agreement.

NOW, for and in consideration of the mutual promises, obligations, and/or covenants contained herein, and for other good and valuable consideration, the receipt, fairness, and sufficiency of which are hereby acknowledged, and the Parties intending to be legally bound, the Parties do hereby mutually agree as follows:

1. Services.

   1.1. The County, through DCSO and the Center, shall provide dispatch services and emergency dispatch services to the City for police, fire, and EMS services twenty-four hours per day, seven days per week, three hundred and sixty-five days per year. These services shall include dispatching appropriate response units to and from an incident, acting as the central point of ordering and dispatching resources, and providing accurate incident reports. These services will be dispatched over the radio, 2-tone paging system, the Alpha-Numeric-Paging system, and the Station Pre-Alerting system.

   1.2. The County, through DCSO and the Center, will utilize the UCA 800 MHz radio system for all radio communications and will assign specific operations channel(s) (Ops) to be used upon dispatch.

   1.3. The County, through DCSO, the Center, and the current Spillman CAD system, will maintain a record of all telephone and radio calls involving the City and record all call times and radio transmissions on the appropriate Police, Fire, and EMS incident.

   1.4. The County, through DCSO, shall provide contingency dispatch services and planning in the event that there is a disruption of services at the Center.

   1.5. The County, through DCSO and the Davis County Human Resources Department, shall have and maintain the sole responsibility for the recruitment, employment, and supervision of the employees assigned to the Center. If the City has any personnel concerns regarding the Center, the City shall address such personnel concerns through the following chain of command: (a) Center Shift Supervisor; (b) Assistant Center Manager; (c) Center Manager; (d) Undersheriff; (e) Sheriff; (f) Human Resources Director; and finally (g) County Commissioner.

2. Equipment.

   2.1. All equipment located within the Center on or before June 30, 2017 is owned and will continue to be owned by the County (the "County Equipment"). As the owner of the County Equipment, the County shall derive all profits (e.g. revenues from sale,

replacement, or otherwise) and all losses (e.g. expenses due to maintenance, replacement, or otherwise) regarding the County Equipment.

2.2. On or after July 1, 2017, all equipment utilized for Police, Fire, and EMS dispatching is subject to the following:

2.2.1. Prior to dispatching equipment being connected to the County's dispatching system for use, the entity or entities responsible for such equipment shall provide all requested records relating to the equipment to and obtain written approval from the Davis County Information Systems Director, Utah Communications Authority, the radio vendor (e.g. Motorola), and the County representative responsible for the County's radios;

2.2.2. Upon approval as required in Section 2.2.1, it shall be the sole obligation and responsibility of the entity or entities responsible for the dispatching equipment to adequately and reasonably maintain such equipment and be a party to a valid maintenance agreement that covers the maintenance of such equipment;

2.2.3. Unless access to the dispatching equipment is necessary due to a bona-fide emergency (e.g. the dispatching equipment fails in a manner that precludes necessary dispatching services from being performed), the entity or entities responsible for the dispatching equipment and/or their employees, agents, contractors, or otherwise shall arrange access to the dispatching equipment with the County, through DCSO and the Center, at least twenty-four (24) hours in advance of the time they desire to gain access to the dispatching equipment. In the event of a bona-fide emergency, as much notice as reasonably possible shall be provided to the County, through DCSO and the Center, and, upon receiving such notice, the County, through DCSO and the Center, will permit access to the dispatching equipment; and

2.2.4. Notwithstanding anything herein to the contrary, the County has no obligation to maintain and shall not be responsible or held responsible for maintenance, replacement, or any other expenses arising from, in connection with, or relating in any way to such dispatching equipment.

3. Compensation. For the 2017 fiscal year (July 1, 2017 through June 30, 2018), the City shall pay the County as follows for the services provided by the County to the City under this Agreement:

3.1. Fire Department fees are calculated by the number of calls for each city/agency utilizing a five-year average (See Table Below):

**FARMINGTON CITY FIRE**

| 2012 | 2013 | 2014 | 2015 | 2016 | Total | 5 Year Avg. | Price Per Call | Total (July 2017 - June 2018) |
|---|---|---|---|---|---|---|---|---|
| 867 | 812 | 970 | 1080 | 1214 | 4943 | 989 | $28.84 | $28,522.76 |

3.2. Police Department fees are charged per officer (See Table Below):

**FARMINGTON CITY POLICE**

| Officers | Price Per Officer | Total (July 2017-June 2018) |
|---|---|---|
| 18 | $2,219.00 | $39,942.00 |

The City shall pay to the County the obligations set forth in Sections 3.1 and 3.2 of this Agreement in equal monthly payments within thirty calendar days of receipt of a monthly invoice from the County.

4. Effective Date of this Agreement. The Effective Date of this Agreement shall be on the earliest date after this Agreement satisfies the requirements of Title 11, Chapter 13, Utah Code Annotated (the "Effective Date").

5. Term of Agreement. The term of this Agreement shall begin as of July 1, 2017 and shall, subject to the termination and other provisions set forth herein, terminate on June 30, 2018 at 11:59 p.m. (the "Term"). The Parties may, by written amendment to this Agreement, extent the Term of this Agreement. Under no circumstances shall the Term of this Agreement extend more than fifty years from July 1, 2017.

6. Termination of Agreement. This Agreement may be terminated prior to the completion of the Term by any of the following actions:

   6.1. The mutual written agreement of the Parties;
   6.2. By either party:
      6.2.1. After any material breach of this Agreement; and
      6.2.2. Thirty calendar days after the nonbreaching party sends a demand to the breaching party to cure such material breach, and the breaching party fails to timely cure such material breach; provided however, the cure period shall be extended as may be required beyond the thirty calendar days, if the nature of the cure is such that it reasonably requires more than thirty calendar days to cure the breach, and the breaching party commences the cure within the thirty calendar day period and thereafter continuously and diligently pursues the cure to completion; and
      6.2.3. After the notice to terminate this Agreement, which the non-breaching party shall provide to the breaching party, is effective pursuant to the notice provisions of this Agreement;
   6.3. By either party, with or without cause, six months after the terminating party mails a written notice to terminate this Agreement to the non-terminating party pursuant to the notice provisions of this Agreement; or
   6.4. As otherwise set forth in this Agreement or as permitted by law, ordinance, rule, regulation, or otherwise.

NOTWITHSTANDING ANYTHING TO THE CONTRARY IN THIS AGREEMENT, THIS AGREEMENT IS SUBJECT TO ANNUAL APPROPRIATIONS BY THE PARTIES AND THE PARTIES SHALL EACH HAVE THE RIGHT TO TERMINATE THIS AGREEMENT, AT ANY TIME UPON WRITTEN NOTICE TO THE OTHER PARTY, IF ANNUAL APPROPRIATIONS, AS PART OF THE PARTY'S ANNUAL PUBLIC BUDGETING PROCESS, ARE NOT MADE BY THE PARTY TO ADEQUATELY OR SUFFICIENTLY PAY FOR THE OBLIGATIONS UNDER THIS AGREEMENT, WITHOUT FURTHER OBLIGATION OR LIABILITY TO THE TERMINATING PARTY UNDER THIS AGREEMENT.

7. Notices. Any notices that may or must be sent under the terms and/or provisions of this Agreement should be delivered, by hand delivery or by United States mail, postage prepaid, as follows, or as subsequently amended in writing:

| To the City: | To the County: |
| --- | --- |
| Farmington City<br>Attn: City Manager<br>160 South Main Street<br>Farmington, UT 84025 | Davis County<br>Attn: Chair, Board of County Commissioners<br>P.O. Box 618<br>Farmington, UT 84025 |

8. Indemnification and Hold Harmless.

   8.1. The City, for itself, and on behalf of its officers, officials, owners, members, managers, employees, agents, representatives, contractors, volunteers, and/or any person or persons under the supervision, direction, or control of the City (collectively, the "City Representatives"), agrees and promises to indemnify and hold harmless the County, as well as the County's officers, officials, employees, agents, representatives, contractors, and volunteers (collectively, the "County Representatives"), from and against any loss, damage, injury, liability, claim, action, cause of action, demand, expense, cost, fee, or otherwise (collectively, the "Claims") that may arise from, may be in connection with, or may relate in any way to the acts or omissions, negligent or otherwise, of the City and/or the City Representatives, whether or not the Claims are known or unknown, or are in law, equity, or otherwise. No term or condition of this Agreement, including, but not limited to, insurance that may be required under this Agreement, shall limit or waive any liability that the City may have arising from, in connection with, or relating in any way to the acts or omissions, negligent or otherwise, of the City or the City Representatives.

   8.2. The County, for itself, and on behalf of its officers, officials, owners, members, managers, employees, agents, representatives, contractors, volunteers, and/or any person or persons under the supervision, direction, or control of the County (collectively, the "County Representatives"), agrees and promises to indemnify and hold harmless the City, as well as the City's officers, officials, employees, agents, representatives, contractors, and volunteers (collectively, the "City Representatives"), from and against any loss, damage, injury, liability, claim, action, cause of action, demand, expense, cost, fee, or otherwise (collectively, the "Claims") that may arise from, may be in connection with, or may relate in any way to the acts or omissions, negligent or otherwise, of the County and/or the County Representatives, whether or not the Claims are known or unknown, or are in law, equity, or otherwise. No term or condition of this Agreement, including, but not limited to, insurance that may be required under this Agreement, shall limit or waive any liability that the County may have arising from, in connection with, or relating in any way to the acts or omissions, negligent or otherwise, of the County or the County Representatives.

9. Governmental Immunity. The Parties recognize and acknowledge that each Party is covered by the *Governmental Immunity Act of Utah*, codified at Section 63G-7-101, et seq., *Utah Code Annotated*, as amended, and nothing herein is intended to waive or modify any and all rights, defenses or provisions provided therein. Officers and employees performing services pursuant to this Agreement shall be deemed officers and employees of the Party employing their services, even if performing functions outside of the territorial limits of such party and shall be deemed officers and employees of such Party under the provisions of the *Utah Governmental Immunity Act*. Each Party shall be responsible and shall defend the action of its own employees, negligent or otherwise, performed pursuant to the provisions of this Agreement.

10. No Separate Legal Entity. No separate legal entity is created by this Agreement.

11. Approval. This Agreement shall be submitted to the authorized attorney for each Party for review and approval as to form in accordance with applicable provisions of Section 11-13-202.5, *Utah Code Annotated*, as amended. This Agreement shall be authorized and approved by resolution or ordinance of the legislative body of each Party in accordance with Section 11-13-202.5, *Utah Code Annotated*, as amended, and a duly executed original counterpart of this Agreement shall be filed with the keeper of records of each Party in accordance with Section 11-13-209, *Utah Code Annotated*, as amended.

12. Survival after Termination. Termination of this Agreement shall not extinguish or prejudice either Party's right to enforce this Agreement, or any term, provision, or promise under this Agreement, regarding insurance, indemnification, defense, save or hold harmless, or damages, with respect to any uncured breach or default of or under this Agreement.

13. Benefits. The Parties acknowledge, understand, and agree that the respective representatives, agents, contractors, officers, officials, members, employees, volunteers, and/or any person or persons under the supervision, direction, or control of a Party are not in any manner or degree employees of the other Party and shall have no right to and shall not be provided with any benefits from the other Party. County employees, while providing or performing services under or in connection with this Agreement, shall be deemed employees of the County for all purposes, including, but not limited to, workers compensation, withholding, salary, insurance, and benefits. City employees, while providing or performing services under or in connection with this Agreement, shall be deemed employees of the City for all purposes, including, but not limited to, workers compensation, withholding, salary, insurance, and benefits.

14. Waivers or Modification. No waiver or failure to enforce one or more parts or provisions of this Agreement shall be construed as a continuing waiver of any part or provision of this Agreement, which shall preclude the Parties from receiving the full, bargained for benefit under the terms and provisions of this Agreement. A waiver or modification of any of the provisions of this Agreement or of any breach thereof shall not constitute a waiver or modification of any other provision or breach, whether or not similar, and any such waiver or modification shall not constitute a continuing waiver. The rights of and available to each of the Parties under this Agreement cannot be waived or released verbally, and may be waived or released only by an instrument in writing, signed by the Party whose rights will be diminished or adversely affected by the waiver.

15. Binding Effect; Entire Agreement, Amendment. This Agreement is binding upon the Parties and their officers, directors, employees, agents, representatives and to all persons or entities claiming by, through or under them. This Agreement, including all attachments, if any, constitutes and/or represents the entire agreement and understanding between the Parties with respect to the subject matter herein. There are no other written or oral agreements, understandings, or promises between the Parties that are not set forth herein. Unless otherwise set forth herein, this Agreement supersedes and cancels all prior agreements, negotiations, and understandings between the Parties regarding the subject matter herein, whether written or oral, which are void, nullified and of no legal effect if they are not recited or addressed in this Agreement. Neither this Agreement nor any provisions hereof may be supplemented, amended, modified, changed, discharged, or terminated verbally. Rather, this Agreement and all provisions hereof may only be supplemented, amended, modified, changed, discharged, or terminated by an instrument in writing, signed by the Parties.

16. Force Majeure. In the event that either Party shall be delayed or hindered in or prevented from the performance of any act required under this Agreement by reason of acts of God, acts of the United States Government, the State of Utah Government, fires, floods, strikes, lock-outs, labor troubles, inability to procure materials, failure of power, inclement weather, restrictive governmental laws, ordinances, rules, regulations or otherwise, delays in or refusals to issue necessary governmental permits or licenses, riots, insurrection, wars, or other reasons of a like nature not the fault of the Party delayed in performing work or doing acts required under the terms of this Agreement, then performance of such act(s) shall be excused for the period of the delay and the period for the performance of any such act shall be extended for a period equivalent to the period of such delay, without any liability to the delayed Party.

17. Assignment Restricted. The Parties agree that neither this Agreement nor the duties, obligations, responsibilities, or privileges herein may be assigned, transferred, or delegated, in whole or in part, without the prior written consent of both of the Parties.

18. Choice of Law; Jurisdiction; Venue. This Agreement and all matters, disputes, and/or claims arising out of, in connection with, or relating to this Agreement or its subject matter, formation or validity (including non-contractual matters, disputes, and/or claims) shall be governed by, construed, and interpreted in accordance with the laws of the state of Utah, without reference to conflict of law principals. The Parties irrevocably agree that the courts located in Davis County, State of Utah (or Salt Lake City, State of Utah, for claims that may only be litigated or resolved in the federal courts) shall have exclusive jurisdiction and be the exclusive venue with respect to any suit, action, proceeding, matter, dispute, and/or claim arising out of, in connection with, or relating to this Agreement, or its formation or validity. The Parties irrevocably submit to the exclusive jurisdiction and exclusive venue of the courts located in the State of Utah as set forth directly above. Anyone who unsuccessfully challenges the enforceability of this clause shall reimburse the prevailing Party for its attorneys' fees, and the Party prevailing in any such dispute shall be awarded its attorneys' fees.

19. Severability. If any part or provision of this Agreement is found to be invalid, prohibited, or unenforceable in any jurisdiction, such part or provision of this Agreement shall, as to such jurisdiction only, be inoperative, null and void to the extent of such invalidity, prohibition, or unenforceability without invalidating the remaining parts or provisions hereof, and any such invalidity, prohibition, or unenforceability in any jurisdiction shall not invalidate or render inoperative, null or void such part or provision in any other jurisdiction. Those parts or provisions of this Agreement, which are not invalid, prohibited, or unenforceable, shall remain in full force and effect.

20. Rights and Remedies Cumulative. The rights and remedies of the Parties under this Agreement shall be construed cumulatively, and none of the rights and/or remedies under this Agreement shall be exclusive of, or in lieu or limitation of, any other right, remedy or priority allowed by law, unless specifically set forth herein.

21. No Third-Party Beneficiaries. This Agreement is entered into by the Parties for the exclusive benefit of the Parties and their respective successors, assigns and affiliated persons referred to herein. Except and only to the extent provided by applicable statute, no creditor or other third party shall have any rights or interests or receive any benefits under this Agreement. Notwithstanding anything herein to the contrary, the County is expressly authorized by the City to enter into similar agreements with any or all of the other cities, or other governmental or quasi-governmental entities, located within Davis County.

22. Recitals Incorporated. The Recitals to this Agreement are incorporated herein by reference and made contractual in nature

23. Headings. Headings contained in this Agreement are intended for convenience only and are in no way to be used to construe or limit the text herein.

24. Authorization. The persons executing this Agreement on behalf of a Party hereby represent and warrant that they are duly authorized and empowered to execute the same, that they have carefully read this Agreement, and that this Agreement represents a binding and enforceable obligation of such Party.

25. Counterparts. This Agreement may be executed in any number of counterparts, each of which when so executed and delivered, shall be deemed an original, and all such counterparts taken together shall constitute one and the same Agreement.

WHEREFORE, the Parties have signed this Agreement on the dates set forth below.

FARMINGTON CITY

Mayor
Dated:

ATTEST:

City Recorder
Dated:

Approved as to Form and Legality:

City Attorney
Dated: May 25, 2017

DAVIS COUNTY

_____

_____
Chair, Davis County Board of Commissioners
Dated: _____

ATTEST:

_____
Davis County Clerk/Auditor
Dated: _____

Approved as to Form and legality:

_____
Davis County Attorney's Office, Civil Division
Dated: _____

# FARMINGTON CITY

H. JAMES TALBOT
MAYOR

BRETT ANDERSON
DOUG ANDERSON
JOHN BILTON
BRIGHAM MELLOR
CORY RITZ
CITY COUNCIL

DAVE MILLHEIM
CITY MANAGER

City Council Staff Report

To: Honorable Mayor and City Council

From: Eric Anderson, City Planner

Date: June 6, 2017

SUBJECT: **700 South Street Cross-Section Modification**
Applicant: **Russell Wilson / Symphony Homes and Nate Reeve / Reeve & Assoc.**

## RECOMMENDATION

I. Move that the City Council approve the street cross-section modification for 700 South with a 4'park strip and a 4' sidewalk, matching 700 South on the eastern portion of the subject property; approval is subject to all applicable Farmington City ordinances and development standards and the following conditions:

1. The 6" difference from the requested modification shall be rectified either through a rear setback variance <u>or</u> through a pedestrian access easement on the front portions of lots 1-4 of the Pheasant Hollow Subdivision;
2. The plat shall be amended to reflect the street cross-section modification prior to recordation.

AND

II. Move that the City Council approve the payment of $15,000.00 as compensation for the loss of open space related to the survey error and subsequent street cross-section modification.

<u>Findings for Approval</u>:

1. The proposed street cross-section modification will allow the applicant to move forward on their project with a minor modification.
2. The proposed modification will still allow for snow removal and limited landscaping.
3. The proposed modification will match 700 South on the eastern border of their project, including park strip and sidewalk.
4. The proposed subdivision plat has not been recorded, therefore the change can be reflected on the recorded plat without having to amend the plat.
5. The street cross-section modification is predicated on a survey error, and the City is granting this modification to not adversely impact improvements that have already been installed.
6. The street cross-section modification is a legislative action and thus discretionary, as a result, it does not set a precedence for any related extenuating circumstances that may arise in the future;

any future applications will be considered on a case-by-case basis and this application does not bind any future City Councils to approve similar applications.

## BACKGROUND

May 2, 2017 Staff Report

The proposed Pheasant Hollow Subdivision was approved late last year and the applicant, Symphony Homes has begun building the 700 South road between 10 West and 50 East. However, there was a survey error discovered after the road improvements had begun and the road was constructed 4' north of the designed location. The applicant and their engineer worked with staff to arrive at four possible solutions as follows:

1) A street cross-section modification that would reduce the park strip on the south side of the road from 7.5' to 3.5', thus shifting the road right-of-way 4' to the north, correcting the survey error. This modification would only affect the park-strip, the sidewalk and the road that has already begun construction would remain in place, from back of curb to back of curb. While 3.5' of park-strip is not ideal, it does provide enough area for snow storage and some limited landscaping.

2) A rear setback variance of 4' was explored to rectify the discrepancy, but because work has already begun on the road, the applicant wanted to modify the street cross-section instead of pursuing the variance; this would enable the road to stay in place, including all infrastructure improvements and utilities. Additionally, this proposal would reduce the overall lot size of lots 1-4 of Pheasant Hollow; this reduction would not bring them into non-conformity, but it would reduce their marketability, according to the applicant.

3) The applicant could leave the 7.5' park strip, as determined by the Zoning Ordinance, put the sidewalk on the front portion of Pheasant Hollow lots 1-4 (on private property), and record a 4' pedestrian access easement over the front of lots 1-4. The lots would remain as is, the houses would be setback the same distance that they are currently, and there would be a public access easement recorded over the sidewalk to ensure continued pedestrian use.

4) The last option was a compromise of all three of the previous options. Because 700 South to the east of Pheasant Hollow was part of the Continental Estates Plat E Subdivision, the cross-section has 4' park-strips and 4' sidewalk, as determined by the old development standards. The proposal would modify the street cross-section reducing the park-strip from 7.5' to 4' and keeping the sidewalk at 4'; this would line 700 South up with the eastern section of the road. There would be an additional 6" that would need to be adjusted for, but that could be rectified in one of two ways: either through a rear setback variance of 6" as discussed in option 2, or through a 6" pedestrian access easement as discussed in option 3.

The Planning Commission recommended option 4 because it lines up with 700 South to the east and it would be up to the developer to figure out how to compensate for the 6" discrepancy. It should be noted that 700 South west of the project area is already offset by a curve in the road, and the commissioners did not feel it important to match the cross-section as it relates to the side treatments. All four options would allow for the road from back-of-curb on the south, to back of sidewalk to the north to be constructed as originally intended and designed.

June 6, 2017 Staff Report

At the City Council meeting held May 2, 2017 the Council expressed dissatisfaction with granting a street cross-section modification to an applicant without receiving just compensation for the loss of open space that would occur from a reduction of the park strip from 7.5' to 3.5'. Staff was instructed to meet with Symphony Homes and Reeve Engineers to negotiate compensation for the loss of open space, which occurred on May 11th. The result of that meeting is as follows:

Because there was a total of 1,195 s.f. lost as a result of the survey error and subsequent street cross-section modification, and there is a total of 34,260 s.f. on lots 1-4, that means that there was a 3.43% loss of open space. Symphony Homes estimates that each lot is worth approximately $130,000 for a total of $520,000; 3.43% of this amount equals a $17,680 loss. Staff is recommending that this number be rounded down to an even $15,000 total to account for staff time and legal cost savings the City would likely save through coming to an agreement between the parties, thus avoiding time wasting litigation; it also accounts for the loose assumptions made in the determination of the valuation. The final amount was agreed to by both parties, and at the May16, 2017 City Council, the amount was verbally accepted by the Council; the above suggested motion renders acceptance of that agreed upon amount as official.

Supplemental Information

1. Vicinity Map
2. Letter from Reeve and Associates
3. Street Cross-Section Modification
4. Pheasant Hollow Plat

Respectfully Submitted

Eric Anderson
City Planner

Review and Concur

Dave Millheim
City Manager

# Farmington City

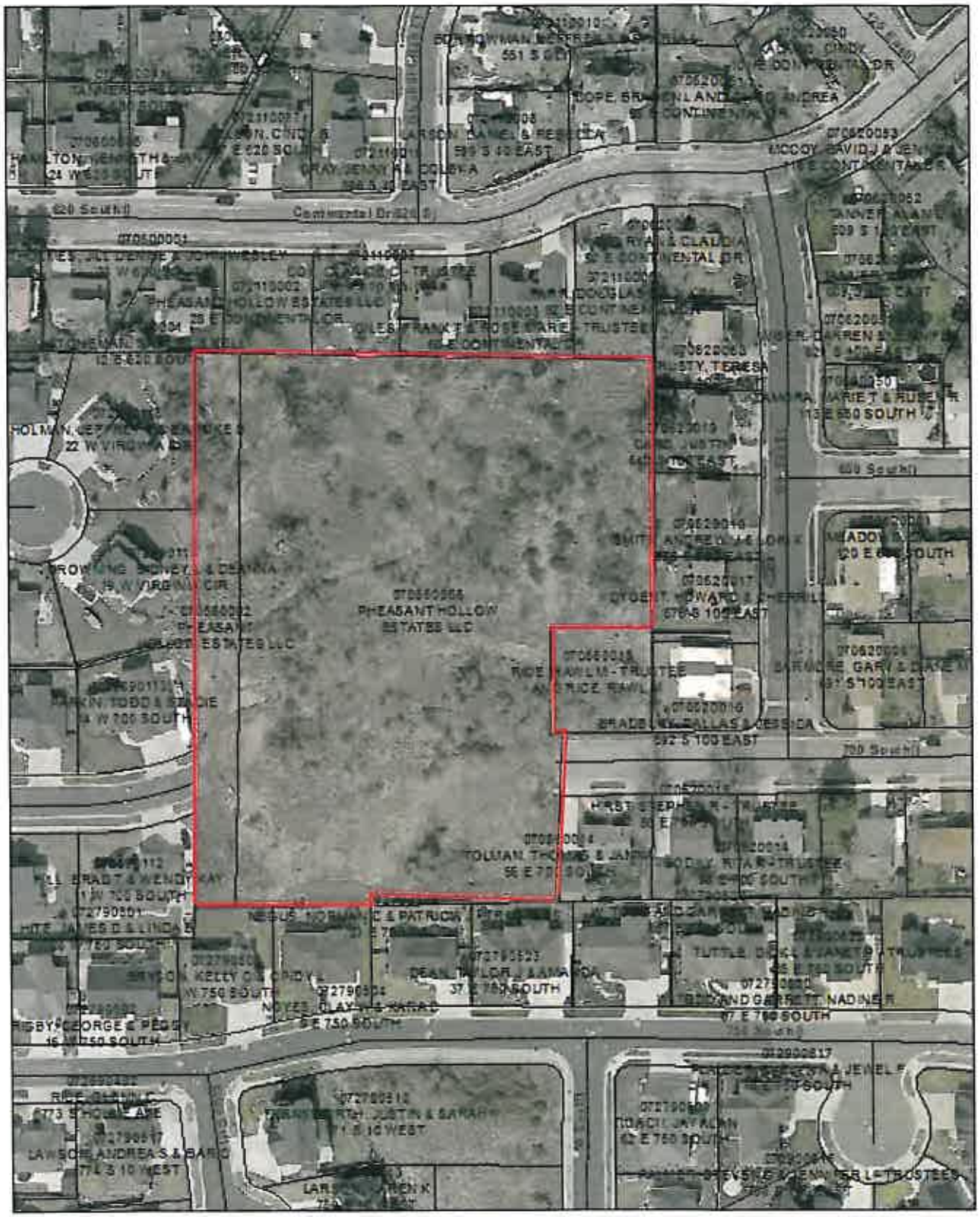


Tuesday, February 24, 2009 1:44:54 AM
M:\Projects\Current Ease\Map.mxd

Reeve
& Associates, Inc.

March 29, 2017

Farmington City
720 West 100 North
Farmington, UT 84025

RE: Pheasant Hollow Subdivision

To Whom It May Concern:

Due to a calibration issue between the GPS satellite and survey instrument the right-of-way and associated infrastructure of 700 South was constructed 4 feet north of the designed location. Due to the soils type and stability of the roadway, Reeve & Associates and the City Engineer do not feel that it is feasible to relocate the roadway.

We have met with Farmington City Staff and presented the option of reducing the park strip along the south side of 700 South to 3.5 feet and shifting the south right-of-way of 700 south to the north 4 feet, which they support. Due to the minimal depth of the lots, the 4 foot shift will make the lots less desirable for Symphony Homes. The development is in the final stage of construction and it is imperative that the plat be recorded in order for the lots to be sold and homes to be constructed.

We are requesting that the Planning Commission and City Council consider the reduction in the park strip to allow the roadway to remain in the constructed location. Due to the cancellation of the April 6 Planning Commission Meeting, we are requesting the possibility of a special meeting with the Planning Commission and City Council to help expedite the approval and lessen the impact on the sale of the lots.

Sincerely,
REEVE & ASSOCIATES, INC.

Nate Reeve, P.E.
Principal Engineer
(801) 621-3100
nreeve@reeve-assoc.com

Chris J. Cave
Planner/Project Manager
(801) 621-3100
ccave@reeve-assoc.com

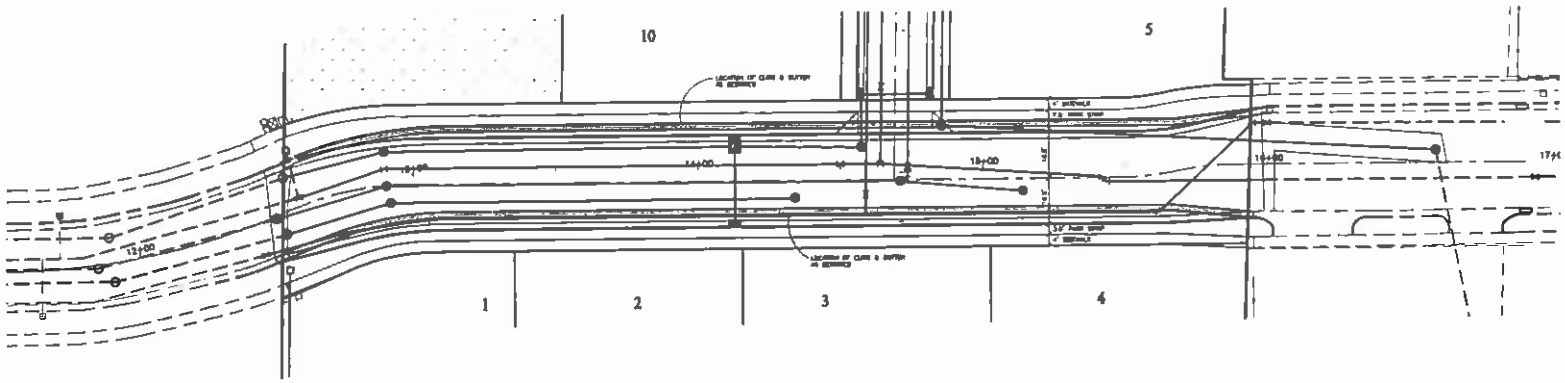


## 700 South Street

20 0 20 40 60

Horizontal Scale 1" = 20'

Blue Stakes Location Center
**Call Toll Free**
**1-800-662-4111**
Two Working Days Before You Dig

THESE PLANS AND SPECIFICATIONS ARE THE PROPERTY OF REEVE & ASSOCIATES, INC., 5160 S 1500 W, TAYLORSVILLE, UTAH 84129, AND SHALL NOT BE REPRODUCED, re-USED, OR USED ON ANY PROJECT OTHER THAN THE PROJECT SPECIFICALLY DESIGNED FOR, WITHOUT THEIR WRITTEN PERMISSION. THE OWNER AND EXAMINERS OF REEVE & ASSOCIATES, INC. DISCLAIM ANY LIABILITY FOR ANY CHANGES OR MODIFICATIONS MADE TO THESE PLANS OR THE DESIGN WITHOUT THEIR CONSENT.

Reeve & Associates, Inc.

| REVISIONS | |
|---|---|
| DATE | DESCRIPTION |

**Pheasant Hollow Subdivision**
FARMINGTON CITY, DAVIS COUNTY, UTAH

**700 South Street - Exhibit**
**11+50.00 - 17+00.00**

**Project Info.**
Engineer: J. MATT REEVE P.E.
Drafter: R. HANSEN
Begin Date: MARCH 20, 2017
Name: PHEASANT HOLLOW SUBDIVISION
Number: 1884-20

Sheet 1 of 1 Sheets

# PHEASANT HOLLOW

PART OF THE NORTHWEST QUARTER OF SECTION 30, TOWNSHIP 3 NORTH, RANGE 1 EAST, SALT LAKE BASE AND MERIDIAN, U.S. SURVEY
FARMINGTON CITY, DAVIS COUNTY, UTAH
FEBRUARY, 2017

**VICINITY MAP**
NOT TO SCALE

## NARRATIVE

[illegible]

## BASIS OF BEARINGS

[illegible]

## BOUNDARY DESCRIPTION

[illegible]

## CURVE TABLE

| | | | | | |
|---|---|---|---|---|---|
| [illegible] | [illegible] | [illegible] | [illegible] | [illegible] | [illegible] |

## LINE TABLE

| | | |
|---|---|---|
| [illegible] | [illegible] | [illegible] |

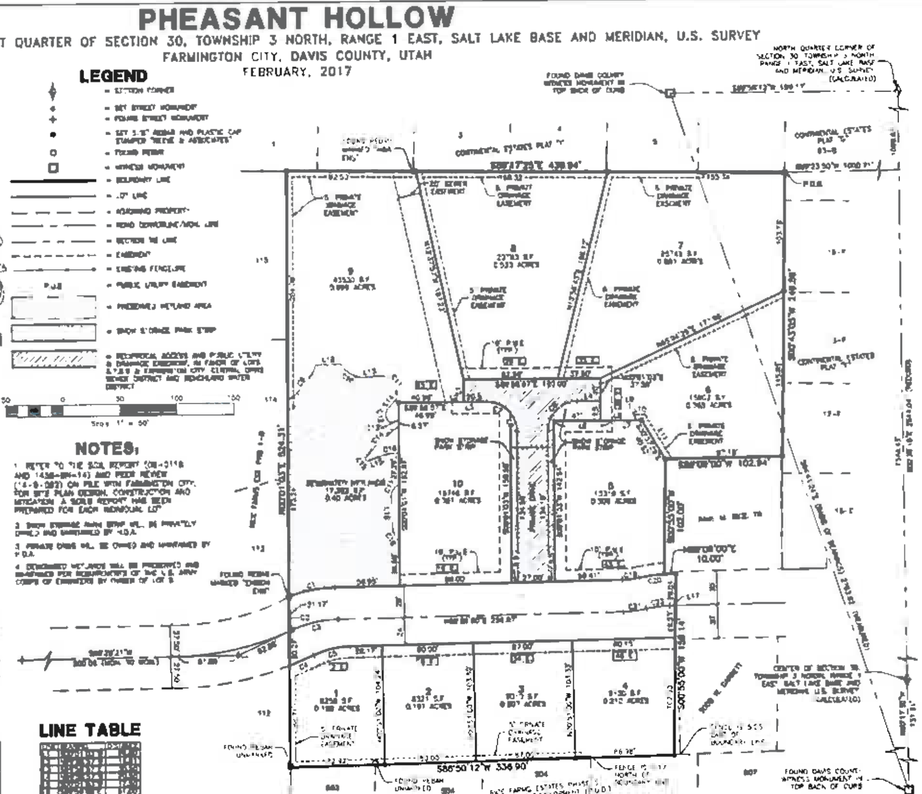


**DEVELOPER**

### SURVEYOR'S CERTIFICATE

TREVOR J. HATCH, DO HEREBY CERTIFY THAT I AM A REGISTERED PROFESSIONAL LAND SURVEYOR IN THE STATE OF UTAH IN ACCORDANCE WITH TITLE 58, CHAPTER 22, PROFESSIONAL ENGINEERS AND LAND SURVEYORS ACT, AND THAT I HAVE COMPLETED A SURVEY OF THE PROPERTY DESCRIBED ON THIS PLAT IN ACCORDANCE WITH SECTION 17-23-17 AND HAVE VERIFIED ALL MEASUREMENTS, AND HAVE PLACED MONUMENTS AS REPRESENTED ON THIS PLAT AND THAT THIS PLAT OF PHEASANT HOLLOW IN FARMINGTON CITY, DAVIS COUNTY, UTAH HAS BEEN DRAWN CORRECTLY TO THE DESIGNATED SCALE AND IS A TRUE AND CORRECT REPRESENTATION OF THE HEREIN DESCRIBED LANDS INCLUDED IN SAID SUBDIVISION, BASED UPON DATA COMPILED FROM RECORDS IN THE DAVIS COUNTY RECORDER'S OFFICE AND FROM SAID SURVEY MADE BY ME ON THE GROUND. I FURTHER CERTIFY THAT THE REQUIREMENTS OF ALL APPLICABLE STATUTES AND ORDINANCES OF FARMINGTON CITY, DAVIS COUNTY CONCERNING ZONING REQUIREMENTS REGARDING LOT MEASUREMENTS HAVE BEEN COMPLIED WITH.

SIGNED THIS ______ DAY OF ______, 20__

PROFESSIONAL LAND SURVEYOR — TREVOR J. HATCH — STATE OF UTAH

UTAH LICENSE NUMBER — TREVOR J. HATCH

### OWNERS DEDICATION AND CERTIFICATION

WE, THE UNDERSIGNED OWNERS OF THE HEREON-DESCRIBED TRACT OF LAND, HEREBY SET APART AND SUBDIVIDE THE SAME INTO LOTS, AND PUBLIC AND PRIVATE STREETS AS SHOWN ON THIS PLAT, AND NAME SAID TRACT OF LAND PHEASANT HOLLOW AND HEREBY DEDICATE, GRANT AND CONVEY TO FARMINGTON CITY, DAVIS COUNTY, UTAH ALL THOSE PARTS OR PORTIONS OF SAID TRACT OF LAND DESIGNATED AS PUBLIC STREETS, THE SAME TO BE USED AS PUBLIC THOROUGHFARES FOREVER, AND ALSO DEDICATE TO FARMINGTON CITY THOSE CERTAIN STRIPS AS EASEMENTS FOR PUBLIC UTILITY PURPOSES AS SHOWN HEREON, THE SAME TO BE USED FOR THE INSTALLATION, MAINTENANCE AND OPERATION OF PUBLIC UTILITY SERVICE LINES, AS MAY BE AUTHORIZED BY FARMINGTON CITY AND DO HEREBY DEDICATE THE LANDS SHOWN HEREON AS PRIVATE DRIVE TO THE HOME OWNERS ASSOCIATION OF SAID SUBDIVISION, AND ALSO DEDICATE SAID PRIVATE DRIVE AS A PUBLIC UTILITY AND DRAINAGE EASEMENT IN FAVOR OF LOTS [illegible], FARMINGTON CITY, CENTRAL DAVIS SEWER DISTRICT, AND BENCHLAND WATER DISTRICT.

THE UNDERSIGNED HEREBY CERTIFY THAT THIS SUBDIVISION HAS MET ALL REQUIREMENTS OF FARMINGTON CITY ORDINANCES.

SIGNED THIS ______ DAY OF ______, 20__

### ACKNOWLEDGMENT

STATE OF UTAH )
COUNTY OF ______ ) ss

ON THE ______ DAY OF ______, 20__ PERSONALLY APPEARED BEFORE ME, THE UNDERSIGNED NOTARY PUBLIC ______ (AND) ______ SIGNER(S) OF THE ABOVE OWNER'S DEDICATION AND CERTIFICATION, WHO BEING BY ME DULY SWORN, DID ACKNOWLEDGE TO ME ______ SIGNED IT FREELY, VOLUNTARILY, AND FOR THE PURPOSES THEREIN MENTIONED.

COMMISSION EXPIRES — NOTARY PUBLIC

### ACKNOWLEDGMENT

STATE OF UTAH )
COUNTY OF ______ ) ss

ON THE ______ DAY OF ______, 20__ PERSONALLY APPEARED BEFORE ME, THE UNDERSIGNED NOTARY PUBLIC ______ (AND) ______ BEING BY ME DULY SWORN, ACKNOWLEDGED TO ME THEY ARE ______ AND ______ OF SAID CORPORATION AND THAT THEY SIGNED THE ABOVE OWNER'S DEDICATION AND CERTIFICATION FREELY, VOLUNTARILY AND IN BEHALF OF SAID CORPORATION FOR THE PURPOSES THEREIN MENTIONED.

COMMISSION EXPIRES — NOTARY PUBLIC

### BENCHLAND WATER DISTRICT

APPROVED BY BENCHLAND WATER DISTRICT THIS ______ DAY OF ______, 20__

DISTRICT MANAGER

### PLANNING COMMISSION APPROVAL

APPROVED THIS ______ DAY OF ______, 20__ BY THE FARMINGTON CITY PLANNING AND ZONING COMMISSION.

CHAIRMAN, FARMINGTON CITY PLANNING COMMISSION

### PROJECT INFORMATION

### DAVIS COUNTY RECORDER

ENTRY NO. ______ FEE PAID ______ FILED FOR RECORD AND RECORDED ______ AT ______ IN BOOK ______ OF THE OFFICIAL RECORDS, PAGE ______

RECORDED FOR

DAVIS COUNTY RECORDER — DEPUTY

### CITY COUNCIL APPROVAL

APPROVED THIS ______ DAY OF ______, 20__ BY THE FARMINGTON CITY COUNCIL.

FARMINGTON CITY MAYOR — ATTEST — CITY RECORDER

### SEWER DISTRICT APPROVAL

APPROVED THIS ______ DAY OF ______, 20__ BY THE CENTRAL DAVIS SEWER DISTRICT.

CENTRAL DAVIS SEWER DISTRICT

### CITY ATTORNEY'S APPROVAL

APPROVED THIS ______ DAY OF ______, 20__ BY THE FARMINGTON CITY ATTORNEY.

FARMINGTON CITY ATTORNEY

### CITY ENGINEER'S APPROVAL

APPROVED THIS ______ DAY OF ______, 20__ BY THE FARMINGTON CITY ENGINEER.

FARMINGTON CITY ENGINEER — DATE

Reeve & Associates, Inc.

FARMINGTON CITY

H. JAMES TALBOT
MAYOR

BRETT ANDERSON
DOUG ANDERSON
JOHN BILTON
BRIGHAM MELLOR
CORY RITZ
CITY COUNCIL

DAVE MILLHEIM
CITY MANAGER

City Council Staff Report

To: Honorable Mayor and City Council

From: Ken Klinker, Planning Department

Date: May 19, 2017

**SUBJECT: Arhaus LLC Shaved Ice Rights-of-Way License Agreement**

**RECOMMENDATION:** Approve the Farmington City Rights-Of-Way License agreement with Arhaus LLC to allow the placement of a shaved ice shack in the City ROW.

**BACKGROUND:** Justin and Heidi Green, dba Arhaus LLC, want to place a shaved ice shack on the parking lot where the DoGroom is located at the corner of 100 E and 200 S. The 10' X10' portion of the lot where they want to locate it is in the public ROW. It is outside the flow of traffic. Parking will be shared with the DoGroom. The business will operate during the summer only.

Respectfully submitted,

Ken Klinker
Planning Department

Review and Concur

Dave Milllheim
City Manager

160 S MAIN · P.O. BOX 160 · FARMINGTON, UT 84025
PHONE (801) 451-2383 · FAX (801) 451-2747
www.farmington.utah.gov

**FARMINGTON CITY RIGHTS-OF-WAY**
**LICENSE AGREEMENT**

**THIS FARMINGTON CITY RIGHTS-OF-WAY LICENSE AGREEMENT** ("License Agreement") is made and entered into this 12 day of May, 20 17, by and between **FARMINGTON CITY**, a Utah municipal corporation ("City"), and Arbaus LLC, a Utah LLC ("Licensee").

**RECITALS:**

**WHEREAS,** Licensee is a Business, licensed and authorized under the laws of Utah to provide Shaved Ice services and facilities within and to the citizens of Farmington City and other surrounding areas; and

**WHEREAS,** pursuant to Utah law, including, but not limited to provisions of *Utah Code Ann.* §§ 10-8-11, 10-8-13, 10-8-84, and the provisions of Title 72, Chapter 7, as amended, Farmington City is authorized to regulate the use of public rights-of-way within its jurisdiction ("Rights-of-Way") and to establish standards and procedures for the safe use of such Rights-of-Way; and

**WHEREAS,** in accordance with authority set forth in applicable Utah law, Farmington City Ordinances require any person, governmental entity or utility desiring to construct, maintain, repair, operate or use any improvements or facilities to be located within any right-of-way to obtain a license or other acceptable rights-of-way use or license agreement with the City authorizing the use of its Rights-of-Way for such improvements or facilities; and

**WHEREAS,** Licensee owns and operates, or desires to own and operate, certain retail food product improvements and facilities related to its Sno Shack services provided within Farmington City ("Facilities"), which Facilities are located, or Licensee desires to locate such Facilities, within the Rights-of-Way; and

**WHEREAS,** the City is willing to permit Licensee to install and operate its Facilities within the Rights-of-Way subject to and conditioned upon the terms and conditions of this Agreement.

**NOW, THEREFORE,** in consideration of the mutual covenants contained herein, and other good and valuable consideration, the receipt and sufficiency of which is hereby acknowledged, the parties agree as follows:

1. **Recitals.** The Recitals set forth above are hereby incorporated by reference into the terms and provisions of this License Agreement.

2. **Definition of Rights-of-Way.** For purposes of this License, the term Rights-of-Way shall mean and include all municipal streets, roads, lanes, and sidewalks within the City that are under the jurisdiction and control of the City and have been specifically dedicated for public use. Rights-of-Way shall not include public utility easements. Rights-of-Way shall not include any real or personal property of the City that is not specifically described herein and shall not include City parks, trails, bike paths, buildings and other structures or improvements, regardless of whether they are situated within the public right-of-way.

3. **Authority to Manage Rights-of-Way.** The City enters into this License Agreement pursuant to its powers to manage its Rights-of-Way, pursuant to common law, the Utah Constitution, and statutory authority, including, but not limited to *Utah Code Ann.* §§ 10-8-11, 10-8-15, 10-8-84, and the provisions of Title 72, Chapter 7, as amended.

4. **Limitation.** This License Agreement may not be used for persons or entities providing telecommunications, cable or electrical services or installing or operating telecommunications, cable or electrical facilities. The use of the City's Rights-of-Ways for such purposes shall be granted by franchise and subject to and pursued in accordance with applicable federal, state and city ordinances, rules and regulations regarding the same.

5. **Grant of License.** Subject to the terms and conditions of this License Agreement, the City hereby grants to Licensee a nonexclusive license ("License") to use certain portions of the Rights-of-Ways to construct, install, maintain, operate, repair, and relocate its Facilities. The use of the Rights-of-Way granted in this License shall be limited to the location of the Facilities at such locations specifically approved by the City pursuant to construction and excavation permits, and shall subject to compliance with all applicable federal, state and local laws, ordinances, standards, specifications and regulations regarding such Facilities and the accommodation of utilities within public rights-of-way. Licensee's authority to use and occupy the Rights-of-Way, as granted herein, is nonexclusive and the City reserves the right and authority to use of the Rights-of-Way for itself and other entities granted the authority to utilize the Rights-of-Way.

6. **Term.** The term of this License is for ten (10) years commencing on the effective date of execution of this License Agreement by the parties. This License Agreement may be extended for successive terms upon the prior written consent of the parties.

7. **License Fee or Tax.** The City does not currently charge a license fee to licensees under the terms and conditions of this License; provided, the City reserves the right to adopt such fees in the future, subject to and to the extent permitted by law. Nothing herein shall limit the City's authority in impose a tax or fee: (1) to recover the management costs of the City imposed in accordance with *Utah Code Ann.* § 72-7-102, as amended; (2) related to excavation, construction, or installation of Licensee's

Facilities; or (3) otherwise permitted by law. Any tax or fee imposed by the City as provided herein shall be adopted by ordinance or resolution and shall be imposed on a competitively neutral basis The City shall provide ninety (90) days' notice of any license fees to be imposed pursuant to this Section.

8. **Coordinated Installation.** In order to prevent and/or minimize the number of cuts to and excavations within the City Rights-of-Way, Licensee shall coordinate with the City and other licensees, franchisees, or users of the Rights-of-Way, when such cuts and excavations will be made. When possible, installation, repairs or maintenance of lines and facilities within the Rights-of-Way shall be made in the same trench and at the time other installations, repairs or maintenance of facilities are conducted within the Rights-of-Way. Licensee may obtain from the City a schedule of proposed street repairs in advance of City work, which schedules shall be subject to change based upon funding and project priority.

9. **Underground Installation.** Unless otherwise expressly permitted in writing by the City, all of Licensee=s Facilities within the Rights-of-Way shall be constructed underground.

10. **Conditions of Occupancy.** The Facilities installed by Licensee within the Rights-of-Way pursuant to the terms of this License shall be located so as to cause a minimum of interference with the use of the Rights-of-Way and shall be installed, constructed, located, and maintained so as not to endanger or unnecessarily interfere with usual and customary use, traffic, and travel upon the Rights-of-Way. Notwithstanding the grant of authority set forth in this License, no Rights-of-Way shall be used by Licensee if the City, in its sole discretion, determines that such use is inconsistent with the terms, conditions, or provisions by which such Rights-of-Way were created or dedicated, or presently used. Nothing contained in this License should be construed as granting to Licensee any rights whatsoever to the use of any private property without the express consent of the owner thereof. In the event the Licensee's Facilities create a hazardous or unsafe condition or an unreasonable interference with property or the public health and safety, then at its own expense, the Licensee shall voluntarily, or upon the request of the City, remove that part of the Facilities that creates the hazardous condition or interference from the subject property or interests.

11. **Excavation Permit.** Licensee shall be required to obtain an Excavation Permit from the City prior to conducting or commencing any work within the Rights-of-Way in accordance with applicable provisions of the City's Excavation Permit Ordinance as set forth in Title 8, Chapter 5, as amended ("Excavation Permit Ordinance"). All construction, installation, maintenance, operation, alteration, repair or reconstruction of Licensee's Facilities or any other work conducted or performed by Licensee within the Rights-of-Way shall comply with the Excavation Permit Ordinance and any Excavation Permit issued thereunder.

12. **Prior Approval.** Prior to construction or alteration of the Facilities, or any portion thereof, Licensee shall in each case, file plans with the City's Public Works

Department and receive written approval of such plans, which approval by the City shall not be unreasonably withheld. Issuance of an excavation, construction, or similar permit as required by City Ordinance, shall constitute such written approval.

13. **Restoration of Rights-of-Way.** As a condition of this License, Licensee shall be subject to and comply with restoration requirements regarding facilities and construction within the Rights-of-Way as more particularly set forth in Farmington City Ordinance § 8-5-120, as amended.

14. **Relocation of Facilities.** As a condition of this License, Licensee shall be subject to and comply with relocation requirements for facilities and structures located within the Rights-of-Way as more particularly set forth in Farmington City Ordinance § 8-5-100, as amended.

15. **Emergency Work.** Any emergency work on Licensee's Facilities within the Rights-of-Way shall be subject to and comply with the provisions of Farmington City Ordinance § 8-5-040, as amended.

16. **Quality and Safety.** All work and materials involved in the construction, operation, maintenance, repair and removal of Licensee's Facilities within the Rights-of-Way shall be performed by Licensee in a safe, thorough, lawful, and reliable manner, and using materials of good and durable quality. Licensee shall install and maintain all parts of its Facilities in a safe and non-dangerous condition throughout the entire term of this License and any holdover period. Licensee's Facilities shall not endanger or unreasonably interfere with the safety of persons or property.

17. **Compliance with Laws.** Licensee shall comply with all applicable federal, state and local laws regarding the installation, maintenance and operation of Licensee's Facilities, including, but not limited to, any applicable City Ordinances regarding installation, repair, or work within the Rights-of-Way. Licensee shall comply with the terms of any lawfully adopted generally applicable local ordinance, including, but not limited to the City's Excavation Permit Ordinance, and any ordinances adopted pursuant to the City's police power. All work performed in the Rights-of-Way shall conform to the requirements of the Farmington City Standards and Specifications, as adopted by the City.

18. **Bond.** Licensee shall not be required to obtain or maintain bonds or other surety as a condition of entering into this License Agreement or continuing its existence. The Licensee and the City recognize that the costs associated with bonds and other surety may be ultimately borne by those provided services by Licensee. The City expressly reserves the right to require such bonds in the future. In the event that bonding is required in the future, the City shall provide Licensee at least sixty (60) days prior written notice thereof. Notwithstanding the above provisions, the Licensee shall be responsible for standard performance bonds and insurance required for encroachment and excavation permits for work done within Rights-of -Way and other bond and surety requirements of general applicability.

19. **Insurance.** Prior to commencing operations in the City pursuant to this License, the Licensee shall furnish to the City evidence that it has adequate worker's compensation, general liability and property damage insurance. The evidence may consist of a statement that the Licensee is effectively self-insured if the Licensee has substantial financial resources, as evidenced by its current certified financial statements and established credit rating, or substantial assets located in the State of Utah. Any and all insurance, whether purchased by the Licensee from a commercial carrier, whether provided through a self-insured program, or whether provided in some other form or other program, shall be in a form, in an amount and of a scope of coverage acceptable to the City and, at a minimum, meeting the current required coverage caps as set forth in the Utah Governmental Immunity Act, as provided in *Utah Code Ann.* §§ 63G-7-101, *et seq.*, as amended, and *Utah Admin. Code* R37-4-3, as amended. All insurance provided hereunder shall list the City, its elected and appointed officers, employees, volunteers, contractors and agents as additional insureds on all certificates of insurance and/or insurance policy endorsements. Insurance provided by Licensee under the terms and conditions of this License shall also comply with the insurance requirements set forth in Farmington City Ordinance § 8-5-130, as amended.

20. **Indemnification.** The Licensee agrees, at its own expense, to protect, indemnify, pay on behalf of, defend and hold harmless the City, its elected and appointed officials, employees, volunteers, contractors and agents, from and against any and all claims, demands, judgments, expenses, liens, and all liability or damage of whatsoever kind and nature, made, rendered, or incurred by, on behalf of, on account of or arising from the Licensee=s, its officers, employees, agents, contractors, subcontractors, or suppliers, work, activities, acts or omissions pursuant to or related to this License, and to pay any and all costs, including reasonable attorneys= fees, incurred by the City in defense of such claims. The City shall promptly give written notice to the Licensee of any claim, demand, lien, liability, or damage, with respect to which the City seeks indemnification and, unless in the City=s judgment a conflict of interest may exist between the parties with respect to the claim, demand, lien, liability, or damage, the City shall permit the Licensee to assume the defense of such with counsel of the Licensee=s choosing, unless the City reasonably objects to such counsel. Notwithstanding any provision of this Section to the contrary, the Licensee shall not be obligated to indemnify, defend or hold the City harmless to the extent any claim, demand, lien, damage, or liability arises out of or in connection with negligent acts or omissions of the City.

21. **Police Power Authority.** In addition to the provisions of this License, the City expressly reserves, and Licensee expressly acknowledges, the City's right and duty to adopt from time to time such ordinances, rules and regulations as the City may deem necessary in the exercise of its police power for the protection of the health, safety and welfare of its citizens and their properties, or to exercise any other rights, powers or duties required or authorized, under any applicable federal, state or local laws, rules and regulation.

22. **Termination by Licensee.** Notwithstanding any other provision of this License to the contrary, Licensee may terminate this License with or without cause ninety (90) days after giving the City notice of Licensee's intent to terminate. Within 180 days from the date of termination of this License, the Licensee shall commence removal of its Facilities from the Rights-of-Way; provided, however, with the written consent of the City, the Licensee may abandon its Facilities, or any portion thereof, within the Rights-of-Way. The Licensee shall repair and restore the Rights-of-Way and all property, public or private, that is disrupted, damaged or destroyed as a result of such removal.

23. **Termination by City.** The City may terminate or revoke this License and all rights and privileges herein only if the Licensee, by act or omission, materially violates a material duty herein set forth within the Licensee's control. In such event, the City, acting by or through its City Council, may determine, after a hearing, that such failure is of a material nature, and thereupon, after written notice giving the Licensee notice of such determination, the Licensee, within thirty (30) calendar days of such notice, shall commence efforts to remedy the conditions identified in the notice and shall have sixty (60) calendar days from the date it receives notice to remedy the conditions. After the expiration of such 60-day period and failure to correct such conditions, the City may declare the License forfeited and terminated, and thereupon, the Licensee shall have no further rights or authority hereunder; provided, however, that any such declaration of forfeiture and termination shall be subject to judicial review as provided by law, and provided further, that in the event such failure is of such nature that it cannot be reasonably corrected within the 60-day time period provided above, the City shall provide additional time for the reasonable correction of such alleged failure if the reason for the noncompliance was not the intentional or negligent act or omission of the Licensee.

24. **Reserved Rights and Remedies.** Nothing contained herein shall be deemed to preclude either party from pursuing any legal or equitable rights or remedies it may have to challenge the action of the other party. All remedies provided herein shall be deemed cumulative.

25. **Remedies at Law.** In the event the Licensee or the City fails to fulfill any of its respective obligations under this License, the Licensee or the City, whichever the case may be, shall have a breach of contract claim and remedy against the other, in addition to any other remedy provided herein or by law.

26. **Alternative Remedies.** Neither the existence of other remedies identified in this License nor the exercise thereof shall be deemed to bar or otherwise limit the right of the City to recover monetary damages for such violation by the Licensee, or judicial enforcement of the Licensee's obligations by means of specific performance, injunction, or any other judicial remedy at law or in equity.

27. **Failure to Enforce Not a Waiver.** Licensee shall not be excused or relieved from complying with any of the terms and conditions of this License by any

failure of the City, or its officers, representatives, agents or employees, to seek compliance or enforcement of such terms and conditions. The failure of the City to exercise a particular remedy at any time shall not waive the City's right to terminate, assess penalties, or assert any other remedy at law or in equity for that or any future breach or default by the Licensee.

28. **Notice.** Unless otherwise expressly provided for in this License, every notice or response required by this License to be served upon the City or the Licensee shall be in writing and directed to the recipient at the address(es) set forth in this Section. Notices or responses may be served personally or by first class, postage pre-paid, certified or registered United States mail. Notice or response shall be deemed to have been duly given to the required party when placed in a properly sealed and correctly addressed envelope: a) upon receipt when hand-delivered with receipt/acknowledgment, or b) upon receipt when sent certified or registered mail.

Notices or responses to the City shall be addressed as follows:

Farmington City
Attn: City Manager
160 South Main Street
Farmington, Utah 84025

With a copy to:

Hayes Godfrey Bell, P.C.
Attn: Farmington City Attorney
2118 East 3900 South, Suite 300
Salt Lake City, Utah 84124

Notices or responses to the Licensee shall be addressed as follows:

Justin & Heidi Green
741 N Monarch Way
Farmington, UT 84025
614 596 9041

With a copy to:

_____
_____
_____
_____

29. **Attorneys' Fees.** In the event either party brings legal action against the other party or such party's bonding company or insurance carriers to compel performance of or to recover for breach of any covenant, agreement, or condition

contained in this License, or for damages, the prevailing party shall be entitled to such reasonable attorneys' fees as are fixed by the judge of the court in which such action is brought.

30. **Relationship.** Nothing herein shall be deemed to create a joint venture or principal-agent relationship between the parties. Nothing contained in this License shall be construed to create an association, trust, partnership, agency relationship, or joint venture between the parties or to impose a trust, partnership or agency duty, obligation or liability on or with regard to any party. Each party shall be individually and severally liable for its own duties, obligations, and liabilities under this License.

31. **Third Party Beneficiaries.** The benefits and protection provided by this License shall inure solely to the benefit of the City and the Licensee. This License shall not be deemed to create any right in any person who is not a party and shall not be construed in any respect to be a contract in whole or in part for the benefit of any third party, other than the authorized successors and assigns of a party as permitted herein.

32. **No Warranties or Guarantees.** Licensee accepts any authority granted herein to use the the Rights-of-Way in an "as is" condition. Licensee agrees that the City has never made any representations, implied or express warranties or guarantees as to the suitability, security or safety of Licensee's location of its Facilities in the Rights-of-Way or possible hazards or dangers arising from other uses of the public right-of-way by the City, other utilities, or the general public. Except as otherwise expressly provided herein, Licensee, and not the City, shall be liable for the function, testing, maintenance, replacement and/or repair of Licensee's Facilities or other activities of Licensee permitted under this License.

33. **Binding Agreement.** This License shall be binding upon the officers, successors, administrators and assigns of each of the parties. The parties represent that when executed by their respective representative, each party has complied with all relevant statutes, ordinances, resolutions, by-laws and other legal requirements applicable to their authority to enter into this License.

34. **No Assignment or Transfer of License.** This License shall not be transferable or assignable.

35. **Utah Law.** This License shall be interpreted pursuant to Utah law.

36. **Time of Essence.** Time shall be of the essence of this License.

37. **Interpretation of Agreement.** Whenever the context of any provision shall require it, the singular number shall be held to include the plural number, and vice versa, and the use of any gender shall include all genders. The paragraphs and section headings in this License are for convenience only and do not constitute a part of the provisions hereof.

38. **Amendments.** This License may be modified or amended by written agreement only. No oral modifications or amendments shall be effective.

39. **Entire Agreement.** This License constitutes the entire agreement between the parties with respect to the subject matter set forth herein and supersedes all prior oral negations between the parties.

40. **Severability.** If any section, sentence, paragraph, term or provision of this License is for any reason determined to be or rendered illegal, invalid or superseded by other lawful authority, including any state or federal, legislative, regulatory or administrative authority having jurisdiction thereof, or is determined to be unconstitutional, illegal or invalid by any court of competent jurisdiction, such portion shall be deemed a separate, distinct and independent provision, and such determination shall have no effect on the validity of any other section, sentence, paragraph, term or provision, all of which shall remain in full force and effect for the term of this License or any renewal or renewals thereof.

*[Signature Page to Follow]*

**IN WITNESS WHEREOF,** the parties hereto have caused this License Agreement to be executed by their respective and duly authorized representatives.

**"CITY"**
Farmington City

By: _____
Its: _____

ATTEST:

_____
City Recorder

**"LICENSEE"**

_____

By: _____
Its: _____

**LICENSEE ACKNOWLEDGMENT**

*[To be added depending on entity type]*

# Farmington City

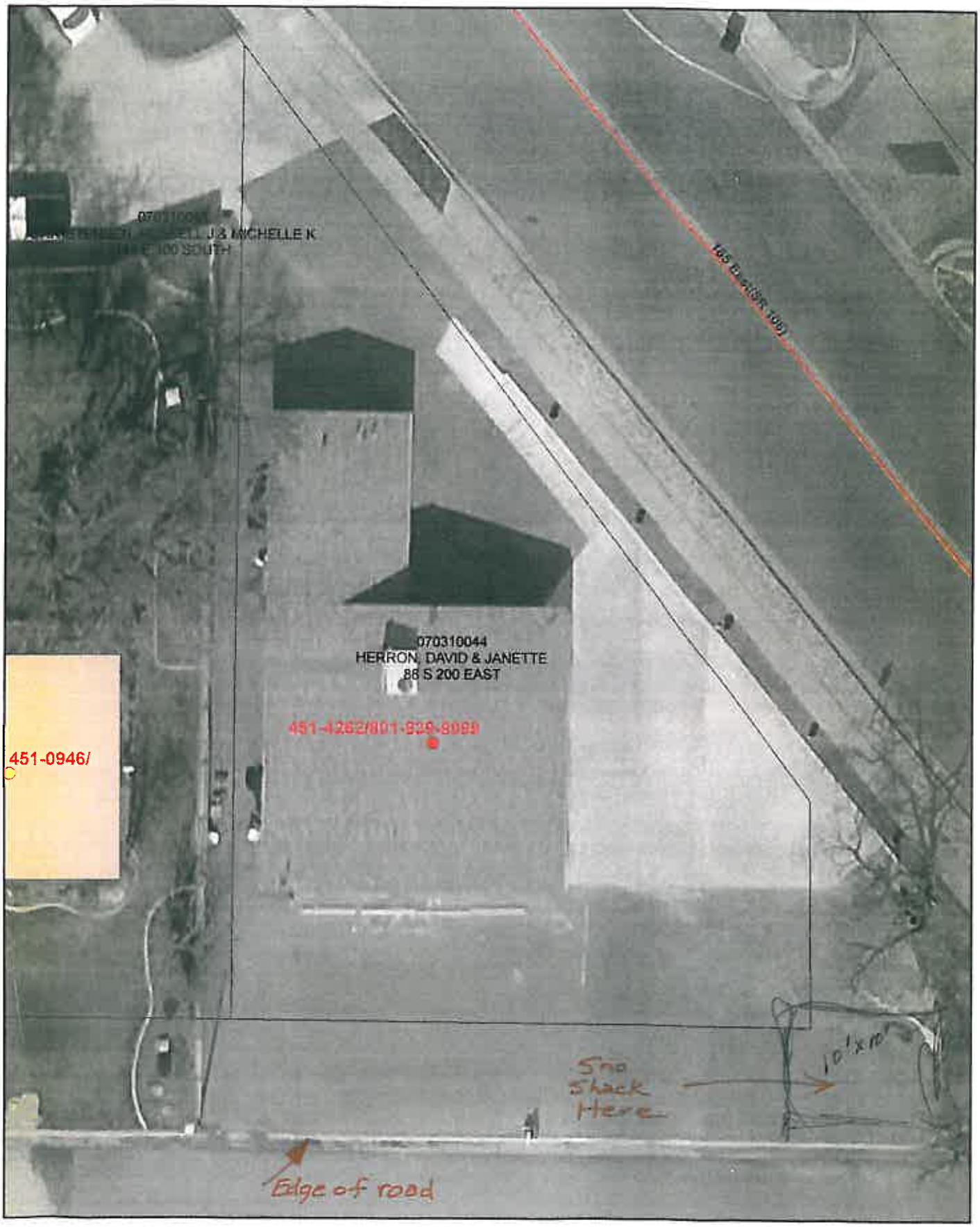


Tuesday, February 24, 2009 10:44:54 AM
M:\Projects\Current\BaseMap.mxd

0 5 10 20 30 Feet

**From:** "skye" <skye@localfirst.org>
**To:** "hgadd" <hgadd@farmington.utah.gov>
**Sent:** Tuesday, May 16, 2017 2:50:00 PM
**Subject:** Local First Utah's Independents Week

Good Afternoon,

I am sending this email to follow up on our earlier phone conversation.

Just as a reminder, I am contacting you on the behalf of Local First Utah. We are a non-profit organization that works to educate Utah about the economic and social benefits of buying from locally owned independent businesses. Local First is seeking your support in declaring July 1st - July 7th Independents Week in Farmington. Independents Week is an amazing opportunity to celebrate of the value of the locally owned independent businesses in your city and we hope you will be a part of it. https://localfirst.org/

I have attached to this email the Independents Week Proclamation to be signed by Mayor Talbot. If you have any questions or concerns for me, please feel free to contact me at any point.

We look forward to working with you!

--
Skye Willard

Local First Utah
www.localfirst.org
801-710-1315

**Independents Week PROCLAMATION**

Whereas, Independents Week provides a time to celebrate the independence of the member of the community of Farmington and the entrepreneurial spirit represented by our core of local independent businesses; and

Whereas, the individual decisions every community member makes today affect the future of Farmington; and

Whereas, Farmington's local independent businesses help preserve the uniqueness of the community and give us a sense of place; and

Whereas, Farmington's core of independently-owned businesses give back to this community in goods, services, time and talent; and

Whereas, the health of Farmington's economy depends on our support of businesses owned by our friends and neighbors; and

Whereas, Farmington's independent business owners and employees enrich community members' shopping experiences with their knowledge & passion;

Therefore, as we celebrate Independents Week 2017, we acknowledge that the ability to choose the direction of Farmington lies within each of us.

NOW, THEREFORE, I, _____, Mayor of the city of Farmington, do hereby proclaim the week of July 1-7 2017, as: "Independents Week" and salute our community members and locally owned independent businesses who are integral to the unique flavor of Farmington and honor their efforts to make Farmington the place we want to live and work.

IN WITNESS WHEREOF, I hereunto set my hand and cause the seal of the city of _____ to be affixed this _____day of_____, 2017

_____

H. James Talbot, Mayor

# FARMINGTON CITY

H. JAMES TALBOT
MAYOR

BRETT ANDERSON
DOUG ANDERSON
JOHN BILTON
BRIGHAM N. MELLOR
CORY R. RITZ
CITY COUNCIL

DAVE MILLHEIM
CITY MANAGER

City Council Staff Report

To: Honorable Mayor and City Council

From: David E. Petersen, Community Development Director

Date: June 6, 2017

SUBJECT: **BRONSON ANDREASEN FEE WAIVER REQUEST**

## RECOMMENDATION

Move the City Council exempt Bronson Andreasen from the standards of the City's temporary use ordinance as per his request to the City dated May 18, 2017, including application and public hearing requirements.

## BACKGROUND

Bronson Andreasen desires to sell potatoes in the old K-Mart parking lot as described in the enclosed letter to the Mayor and City Council. This activity is considered a temporary use and as such is a conditional use. For such uses an application and hearing, and certain fees are required. However, in Mr. Andreasen's situation he is 17 years old and it is recommended that the City Council exempt him from the standards of the ordinance to do his potato sales. The Council has the authority to do this pursuant to 11-28-120.I. of the Zoning Ordinance.

Respectively Submitted

David Petersen
Community Development Director

Review and Concur

Dave Millheim
City Manager

160 S MAIN • P.O. BOX 160 • FARMINGTON, UT 84025
PHONE (801) 451-2383 • FAX (801) 451-2747
www.farmington.utah.gov

May 18, 2017

Farmington City
160 South Main Street
Farmington, UT 84025

Dear Mayor Talbot & City Council members:

My name is Bronson Andreasen and I live just off of Shepard lane, west of the Freeway. I'm planning on serving an LDS missionary next year and have been earning money and continue to work to pay for this myself. As part of my plan to help fund my mission, I have family connections in Idaho that I can get potato's to sell here in Utah this Fall during harvest time. In planning on how this will work, my father and I have been following all of the procedures to get required licenses and paperwork with Farmington City to make this happen.

We have received permission from Jon Asay, owner of ExtraSpace Storage to let me sell the potato's in his parking lot. We plan on selling the potato's from a trailer during the first 2 weekends in October. When we called the city to fill out the required paperwork and pay the fee's, we were notified that we had to fill out a Conditional Use Permit and pay a $225 fee. We also have to pay a fee of $50 for a Temporary Business License. We were surprised at the high fee attached for the Conditional Use Permit for selling potato's for a few weekends. At the small margin that I would make after my cost for the potato's, this fee would substantially cut into any profits that I earn. I anticipate that just the Conditional Use Permit would take about 15% - 30% of my profit.

I'm writing this letter asking if you would consider waiving the Conditional Use Permit of $225. I know there is still the $50 Temporary Business License that needs to be paid. Thank you for your consideration.

Bronson Andreasen

Bronson Andreasen

# FARMINGTON CITY

H. JAMES TALBOT
MAYOR

BRETT ANDERSON
DOUG ANDERSON
JOHN BILTON
BRIGHAM N. MELLOR
CORY R. RITZ
CITY COUNCIL

DAVE MILLHEIM
CITY MANAGER

City Council Staff Report

To: Mayor and City Council

From: Keith Johnson, Assistant City Manager

Date: May 31, 2017

Subject: **LEASE AGREEMENT FOR HOUSE AT 190 SOUTH MAIN.**

## RECOMMENDATIONS

Approve the enclosed lease agreement for the house at 190 S. Main next to City Hall.

## BACKGROUND

The City has fixed up the house located at 190 S. Main St. The City spent less than $10,000 to do so and we will recoup that cost in about a year from rent payments. We feel it is better to have someone rent the home and living there and taking care of it rather than letting it sit vacant. The lease amount is $750.00 per month.

Respectfully Submitted,

Keith Johnson,
Assistant City Manager

Review and Concur,

Dave Millheim,
City Manager

160 S MAIN • P.O. BOX 160 • FARMINGTON, UT 84025
PHONE (801) 451-2383 • FAX (801) 451-2747
www.farmington.utah.gov

# LEASE AGREEMENT

**THIS LEASE AGREEMENT** is made and entered into as of the 24th day of June, 2017, by and between **FARMINGTON CITY,** a Utah municipal corporation, hereinafter referred to as "Landlord," and **Marianne Millheim,** hereinafter referred to as "Tenant."

## RECITALS:

A. Landlord is the record title owner of that certain real property and home thereon located at 190 South Main Street, Farmington, Utah 84025 (hereinafter referred to as the "Premises").

B. Landlord desires to lease the Premises to Tenant and Tenant desires to lease the Premises from Landlord.

C. The parties desire to formalize their agreement and understandings to writing.

**NOW, THEREFORE**, in consideration of the mutual covenants contained herein, and other good and valuable consideration, the receipt and sufficiency of which are hereby acknowledged, the parties hereby agree as follows:

1. **Lease of Premises.** Subject and upon the terms and conditions set forth in this Lease, Landlord hereby leases the Premise to Tenant, and Tenant hereby lease the Premises from Landlord. The Premises are provided to the Tenant without any furnishings.

2. **Term.** This Lease shall be 1 (one) year with month-to-month basis thereafter commencing on June 24, 2017.

3. **Rent.** Tenant shall pay to Landlord SEVEN HUNDRED FIFTY DOLLARS AND NO/100 DOLLARS ($750.00) per month as rent, payable in advance on or before the first day of each month. If the rent is not paid within five (5) days after said date, Tenant agrees to pay an additional late charge equal to five percent (5%) of the monthly rental amount. Provision of the five (5) day grace period for late charge purposes shall not affect the status of the rent as past due for purposes of unlawful detainer.

4. **Utilities.** Tenant shall pay in a timely manner all charges for utilities incurred by Tenant on the Premises.

5. **Taxes.** During the term of this Lease, Landlord shall pay and discharge when due all real property taxes, if any, that are or may be levied or assessed with respect to the Premises. Tenant shall be responsible to pay any personal property taxes levied on Tenants' property located on the Premises.

6. **Use.** The Premises shall be used exclusively as a single-family residence. The number of persons there residing shall not exceed the members of Tenants' immediate family, including spouse and children. Persons staying on the Premises fifteen (15) days or more shall be deemed residents, unless the parties agree otherwise.

7. **Limitation on Use.** Tenant agrees not to smoke or to allow smoking within the house located on the Premises during the term of this Lease.

8. **Pets.** Tenant shall not have any pets during the term of this Lease.

9. **Compliance with Applicable Laws.** Throughout the term of this Lease, Tenant agrees to comply with all applicable laws, ordinances, rules, and regulations of any governmental entity having jurisdiction over the Premises.

10. **Assignment and Subletting.** Tenant shall not assign this Lease or sublet any portion of the Premises without the prior written consent of the Landlord being first obtained. Landlord may assign any rights under this Lease, upon reasonable notice to Tenant, but such assignment shall not operate to cut short any fixed term provided herein.

11. **Maintenance, Repairs or Alterations.** As of the date of this Lease, Tenant accepts the Premises as being in good order and repair unless otherwise stipulated in writing by the parties. Tenant shall, at Tenants' own expense, maintain the Premises in a clean and sanitary manner, including all equipment, appliances, furniture and furnishings therein, and shall surrender the same, upon termination of the Lease, in as good a condition as received, normal wear and tear expected. Tenant shall be responsible for all repairs required for damages caused by Tenants' negligence and that of Tenants' family, guests or invitees on the Premises. Tenant shall not paint or otherwise redecorate or make alterations to the Premises without the prior written consent of the Landlord being first obtained. Tenant shall irrigate and maintain any surrounding grounds, including lawns and shrubbery, and keep the same clear of rubbish, weeds or snow on the walkways. Tenant will not remove Landlord's fixtures, furniture or equipment from the Premises for any purpose.

12. **Entry and Inspection.** Tenant shall permit Landlord or Landlord's agents to enter the Premises at reasonable times and upon reasonable notice for the purpose of inspecting the Premises or showing the same to prospective tenants or purchasers, or for making necessary repairs. Tenant shall not add or change locks, except by written permission of Landlord. Tenant shall furnish Landlord keys to all locks added or changed by the Tenant.

13. **Quiet Enjoyment.** Landlord covenants that Tenant shall have quiet and peaceful possession of the Premises as against any person or entity claiming the same by, through or under Landlord.

14. **Security Deposit.** On execution of this Lease, a security deposit of Seven Hundred Fifty Dollars ($750.00) shall be posted with Landlord by Tenant to secure the performance of Tenants' obligations. Landlord may, but shall not be obligated to, apply all or portions of said deposit on account of Tenants' obligations. Any balance remaining upon termination shall be returned to Tenant, provided Tenant leaves the Premises in a clean, orderly condition and in good repair. If there is damage to the Premises, the deposit may be utilized to repair such damages, at the option of Landlord.

15. **Limit on Liability.** Landlord shall not be liable to any person for any damages or losses to person(s) or property caused by Tenant, or Tenants' guests, invitees and other persons on the Premises. Landlord shall not be liable for personal injury or damage or loss of Tenants'

personal property (furniture, jewelry, clothing, etc.) from theft, vandalism, fire, water, rain, hail, smoke, explosions, sonic booms, or other causes whatsoever, unless the same is due to the negligence of Landlord. Landlord strongly recommends that Tenant secure insurance to protect Tenant against the above occurrences. Tenant hereby agrees to indemnify and hold Landlord harmless from all liability, claims and suits in connection with or arising out of any loss or damage to any person or property occurring on the Premises which are not caused by Landlord's negligence.

16. **Damage or Destruction of the Premises.** If the Premises are damaged or destroyed by fire or other casualty during the term of this Lease, then Landlord may elect to either terminate this Lease or to effect restoration. This election shall be exercised by written notice to the Tenant within twenty (20) days after occurrence of such damage. If Landlord elects to restore the Premises, then Landlord shall, within sixty (60) days after occurrence of such damage, commence to restore the Premises and shall complete such restoration as rapidly as is reasonably possible under the circumstances. In such event, this Lease shall continue in full force and effect. In the event of such damage or destruction, rent hereunder shall be abated for the time during which, and to the extent to which, the Premises may not be used by Tenant or anyone claiming by, through or under Tenant, before repair or rebuilding. Tenant shall be entitled to receive a refund of any advance rent paid by Tenant, pro-rated for the period during which the Premises are unusable by reason of such destruction or damage. Immediately upon completion of the restoration and repairs, and provided this Lease has not been previously terminated, the full rental provided for herein shall be resumed. If Landlord is prevented by any federal, state, county or city laws or regulations from making the repairs to the Premises mentioned in this section, and regardless of the extent of the damage, this Lease may be terminated at the option of either party upon notice in writing to the other.

17. **Termination.** In the event Landlord shall determine that Landlord needs the Premises in connection with Landlord's facilities and activities, Landlord shall have the right to terminate this Lease at any time by serving written notice of termination upon Tenant at least sixty (60) days prior to the date of termination, which notice may be served personally or by certified mail, return receipt requested, addressed to Tenants' last known address. In the event of such termination, any rental prepaid by Tenant shall be apportioned as of the date of such termination and no further rent shall be due and owing to Landlord from Tenant thereafter.

18. **Default and Re-Entry.** In the event that during the term of this Lease, regardless of the pendency of any bankruptcy, reorganization, receivership, insolvency or other proceeding in law, in equity, or before any administrative tribunal, which has prevented or might prevent compliance with the terms of this Lease:

a. Tenant shall default in the payment of any installment of rent or other sum herein specified to be paid by Tenant and such default shall continue for ten (10) days after receipt of written notice of such default from Landlord; or

b. Tenant shall default in the observance or performance of any of Tenants' covenants, agreements or obligations hereunder, and such default shall not be cured within thirty (30) days after Landlord shall have given to Tenant written notice specifying such default or defaults; or

c. Tenant agrees that in the event all or substantially all of Tenants' assets be placed in the hands of a receiver or trustee, and such receivership or trusteeship continue for a period of thirty (30) days, or should the Tenant make an assignment for the benefit of creditors or file bankruptcy, or should the Tenant institute any proceedings under the Bankruptcy Act as the same now exists, or under any other act relating to the subject of bankruptcy wherein the Tenant seeks to be adjudicated as bankrupt, or to be discharged of its debts, or to effect a plan of liquidation, composition or reorganization, or should any involuntary proceedings be filed against the Tenant under any such bankruptcy laws and the Tenant consents thereto or acquiesces therein by pleading or default, then this Lease or any interest in and to the Premises shall not become an asset in any of such proceedings and, in any events and in addition to any and all rights or remedies of the Landlord hereunder or by law provided, it shall be lawful for the Landlord to declare the term hereof ended and to re-enter the Premises and take possession thereof and remove all persons therefrom, and either:

i. With or without terminating or forfeiting this Lease and in either event without in any way affecting any rights or remedies of Landlord or any duties or obligations of Tenant hereunder, re-let the Premises as the agent and for the account of Tenant upon such terms and conditions as Landlord may deem advisable, in which event the rents received on any such re-letting or collecting, including any necessary renovation and alteration of the Premises and reasonable attorneys' fees and any real estate commission actually paid, and thereafter toward payment of all sums due or to become due to Landlord hereunder; and if a sufficient sum shall not be thus realized to pay such rent and other charges, Tenant shall pay to Landlord monthly any deficiency and Landlord may sue therefor as such monthly deficiency shall arise; such monthly deficiencies shall be paid punctually when due as herein provided notwithstanding the fact that Landlord may thereafter realize monthly rental in excess of the monthly payments herein specified during subsequent months; or

ii. Terminate this Lease and retain the property, if any, pledged as security for the performance of this Lease.

The foregoing remedies of Landlord shall not be exclusive but shall be cumulative and in addition to all remedies now or hereafter allowed by law or elsewhere provided for.

19. **Holding Over.** Tenant agrees that all remaining provisions of this Lease Agreement pertaining to the lease of the Premises shall remain binding upon the parties after expiration of the express term of the Lease if Tenant remains in possession.

20. **Surrender of Premises.** Tenant agrees to surrender the Premises at the termination of the tenancy herein created, or any extension thereof, in as good order and repair as when received, reasonable use and wear tear excepted.

21. **Interpretation.** The words "Landlord" and "Tenant," as used herein, shall include the plural as well as the singular. The neuter gender includes the masculine and feminine, and vice-versa. The word "term" shall include any extensions thereof.

22. **Time.** Time is of the essence for this Lease.

23. **Notices.** Any notice required or desired to be given hereunder shall be deemed sufficient if delivered personally or sent by certified or registered mail, return receipt requested, postage prepaid, addressed to either party as follows:

Landlord: Farmington City
Attn: City Manager
160 South Main Street
P.O. Box 160
Farmington, UT 84025

Tenant: Marianne Millheim
472 Island View Circle
Farmington UT 84025

Rent payments shall be made to Landlord at its address listed above.

24. **Severability.** Should any portion of this Lease for any reason be declared invalid or unenforceable, the invalidity or unenforceability of such portion shall not affect the validity of any of the remaining portions and the same shall be deemed in full force and effect as if this Lease had been executed with the invalid portions eliminated.

25. **Governing Law.** This Lease and the performance hereunder shall be governed by the laws of the State of Utah.

26. **Counterparts.** The fact that the parties hereto execute multiple but identical counterparts of this Agreement shall not affect the validity or efficacy of their execution, and such counterparts, taken together, shall constitute one and the same instrument, and each such counterpart shall be deemed an original.

27. **Waiver.** No waiver of any of the provisions of this Lease shall operate as a waiver of any other provision, regardless of any similarity that may exist between such provisions, nor shall a waiver in one instance operate as a waiver in any future event. No waiver shall be binding unless executed in writing by the waiving party.

28. **Captions.** The captions preceding the paragraphs of this Lease are for convenience only and shall not affect the interpretation of any provision herein.

29. **Attorneys' Fees.** In the event either party hereto defaults in any of the covenants or agreements contained herein, or if an unlawful detainer action must be prosecuted for such default, the defaulting party shall pay all costs and expenses, including a reasonable attorney's fee, incurred by the other party in enforcing its rights hereunder whether incurred through litigation or otherwise.

30. **Entire Agreement.** This Agreement contains the entire agreement and understanding of the parties with respect to the subject matter hereof and supersedes any prior

negotiations, promises, inducements, representations or agreements pertaining to the subject matter hereof which are not set forth herein.

31. **Binding Effect.** This Lease and the covenants, terms and conditions hereof, shall be binding upon and inure to the benefit of the heirs, representatives, successors and assigns of the parties hereto.

32. **Amendment.** Any amendment to this Lease shall be made in writing and signed by the parties hereto.

**IN WITNESS WHEREOF**, the parties hereto have executed this Lease individually as of the day and year first hereinabove written.

**"LANDLORD"**

**FARMINGTON CITY**

ATTEST:

_____
Holly Gadd
City Recorder

By:_____
H. James Talbot
Mayor

**"TENANT"**

_____
Marianne Millheim

## LANDLORD ACKNOWLEDGMENT

STATE OF UTAH )
:ss.
COUNTY OF DAVIS )

On the _____ day of _____, 2017, personally appeared before me H. James Talbot, who being duly sworn, did say that he is the Mayor of **FARMINGTON CITY**, a municipal corporation of the State of Utah, and that the foregoing instrument was signed in behalf of the City by authority of its governing body and said H. James Talbot acknowledged to me that the City executed the same.

_____
Notary Public

My Commission Expires:

_____

## TENANT ACKNOWLEDGMENT

STATE OF UTAH )
:ss.
COUNTY OF DAVIS )

On the ____ day of _____, 2017, personally appeared before me Marianne Millheim, who being duly sworn, did say that she is the signer of the foregoing instrument, who duly acknowledged to me that she executed the same.

_____
Notary Public

My Commission Expires:

_____

# CITY COUNCIL AGENDA

For Council Meeting:
June 6, 2017

**SUBJECT: City Manager Report**

NOTE: Appointments must be scheduled 14 days prior to Council Meetings; discussion items should be submitted 7 days prior to Council meeting.

# CITY COUNCIL AGENDA

For Council Meeting:
June 6, 2017

**SUBJECT: Mayor Talbot & City Council Reports**

NOTE: Appointments must be scheduled 14 days prior to Council Meetings; discussion items should be submitted 7 days prior to Council meeting.